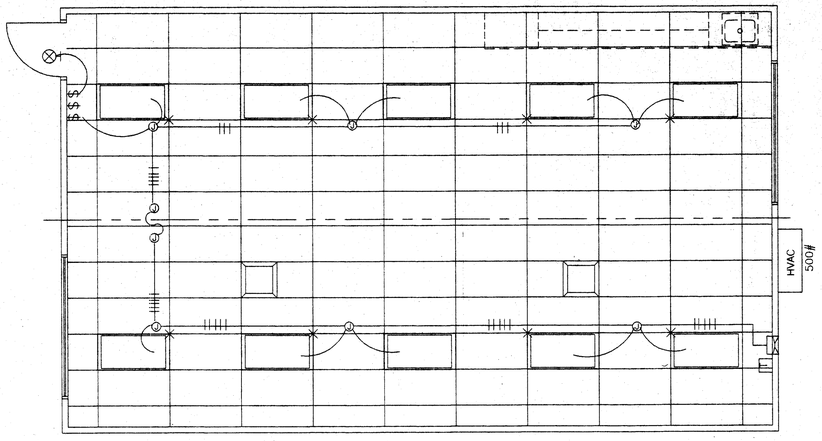

1 / E1 LIGHT FIXTURE PLAN
1/4" = 1'-0"

STANDARD ELECTRICAL SYMBOLS

- FLUORESCENT LIGHTING FIXTURE – SURFACE MOUNTED.
- FLUORESCENT LIGHTING FIXTURE – RESCESSED.
- FLUORESCENT LIGHTING FIXTURE – WALL MOUNTED (EXTERIOR)
- INCANDESCENT LIGHTING FIXTURE – WALL MOUNTED (INTERIOR).
- DUPLEX WALL CONVENIENCE OUTLETS +18".
- SINGLE POLE LIGHT SWITHCES +48", HUBBELL PREMIUM, BRYANT HEAVY DUTY, OR LEVITON SPECIFICATIONS GRADE.
- ELECTRICAL CROSSOVER J–BOXES ABOVE T–BAR CEILING #1–4"X1", #22 4"X2"
- WALL CLOCK OUTLET WITH POWER OUTLET +84".
- a — SWITCH SUBSCRIPTS – a=DEVICE CONTROLLED.
- 15 AMP DUPLEX RECEPTACLE +18".
- JUNCTION BOX – SIZE AND TYPE AS REQUIRED.
- PANELBOARD – SEE SCHEDULE.
- TERMINAL CABINET – SIZE AND TYPE AS NOTED.
- CONDUIT CONCEALED IN CEILING OR WALL.
- CONDUIT CONCEALED BELOW FLOOR OR GRADE.
- HOMERUN TO RESPECTIVE PANEL TO TERMINAL.
- INDICATES 1#14 (GREEN) GROUND WIRE, OTHER SIZES AS INDICATED.

NOTE — BRANCH CIRCUIT WITHOUT FURTHER DESIGNATION IS A 2#14 WIRE CIRCUIT, FOR MORE THAN 2#14 WIRES AS FOLLOWS, —III— 3#14, —IIII— 4#14 ETC. FOR OTHER SIZES AS FOLLOWS, —III$_{10}$ 3#10, —III$_{6}$ 4#6 ETC.

- Ⓐ — FIXTURE IDENTIFICATION – LETTER INDICATES TYPE.
- N.I.E.S. — ABBREV. FOR NOT IN ELECTRICAL SECTION OF THESE PLANS AND SPEC'S.
- MT — ABBREV. FOR EMPTY CONDUIT WITH POLY PULL CORD.
- FUSED DISCONNECT SWITCH SIZE AS REQUIRED. PROVIDE FUSES AS RECOMMENDED BY EQUIPMENT SUPPLIER.
- [W.E.F.] — WALL MOUNTED EXHAUST FAN N.I.E.S. CONNECT AS REQUIRED.
- 50 AMP 250 VOLT RANGE RECEPTACLE.
- F — FIRE ALARM STATION – OUTLET ONLY, 4" SQ. BOX W/ SINGLE DEVICE RING AND COVER +48"CENTERLINE
- FIRE ALARM HORN – OULET ONLY – 4" SQ. BOX W/ SINGLE DEVICE RING AND COVER +90" MIN. AND NOT LESS THAN 6" BELOW FINISHED CEILING.
- FIRE ALARM VISUAL ALARM– OUTLET ONLY – 4" SQ. BOX W/ SINGLE DEVICE RING AND COVER BOTTOM +80". A.F.F. BUT NO GREATER THAN +96". IF CEILING MOUNTED PER NFPA72 TABLE 6–4.4.1(b).
- SPEAKER– OUTLET ONLY – 4" SQ. BOX W/ SINGLE DEVICE RING AND COVER +84"
- INTERCOM TELEPHONE– OUTLET ONLY– 4" SQ. BOX W/ SINGLE DEVICE RING AND COVER +48"
- M — FIRE ALARM MINI HORN – OULET ONLY – 4" SQ. BOX W/ SINGLE DEVICE RING AND COVER +90" MIN. AND NOT LESS THAN 6" BELOW FINISHED CEILING.

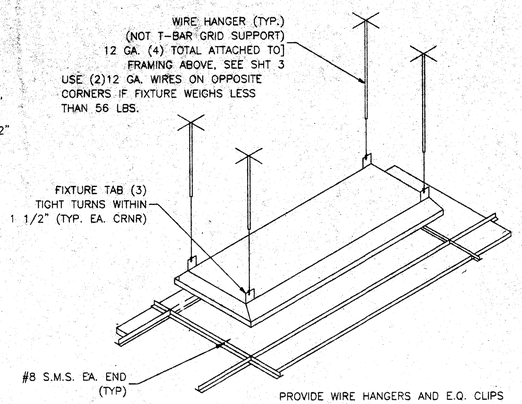

SUPPORT DETAIL

PROVIDE WIRE HANGERS AND E.Q. CLIPS AS REQUIRED BY CALIFORNIA SEISMIC REGULATIONS CBC 2501.A.5 & IR. M–3

FIRE ALARM SYSTEM

1. THE FIRE ALARM SYSTEM SHALL CONFORM TO THE CALIFORNIA ELECTRICAL CODE
2. INSTALLATION OF THE FIRE ALARM SYSTEM SHALL NOT BE STARTED UNTIL DETAILED PLANS AND SPECIFICATIONS, INCLUDING CALIFORNIA STATE FIRE MARSHAL LISTING NUMBERS FOR EACH COMPONENT OF THE SYSTEM HAVE BEEN APPROVED BY THE DIVISION OF THE STATE ARCHITECT.
3. UPON COMPLETION OF THE INSTALLATION OF THE FIRE ALARM SYSTEM, A SATISFACTORY TEST OF THE ENTIRE SYSTEM SHALL BE MADE IN THE PRESENCE OF THE ENFORCING AGENCY.

GENERAL NOTES

1. GROUNDING ELECTRODE CONDUCTOR SIZED PER CEC
2. ALLOW FOR 12' MOVEMENT IN ANY DIRECTION IF PAD FOUNDATION IS USED.
3. PROVIDE BONDS TO BLDG. STEEL & PANEL (#8 CU)
4. PANEL TO LISTED FOR USE AS SERVICE EQUIPMENT.

FIXTURE NOTES:

1. ALL FLUORESCENT LIGHT FIXTURES SHALL HAVE ENERGY SAVING LAMPS AND BALLASTS.
2. LUMINATES/BALLASTS SHALL BE CERTIFIED PER CALIFORNIA BUILDING CODE TITLE 24.
3. FLUORESCENT LIGHT FIXTURE TYPE "A" SHALL BE CONTROLLED TO PROVIDE TWO LEVELS OF LIGHTING. SWITCH (SA) SHALL CONTROL THE TWO OUTER LAMPS AND SWITCH (SB) SHALL CONTROL THE TWO INNER LAMPS.

SYMBOL	DESCRIPTION	WATTS	MANUFACTURER
	2'X4' FLOURESCENT DROP IN FIXTURE, ACRYLIC PRISMATIC LENS. T–8 ELECTRONIC BALLASTS (3)35 WATT TUBES, WT. 27 LBS.	SP41 32 W	CRESCENT MASTER 24GP332FSA11KOYU1 SLAVE 24GP332FSA11XXXV6
	FLOURESCENT SURFACE MOUNTED EXTERIOR LIGHT WITH IMPACT RESISTANT ENCLOSURE. .125 THICK CLEAR PRISMATIC ONE PIECE LENS W/ NEOPRENE GASKET & "POSIGRIP" STAINLESS STEEL SCREWS.	(2) 7W TT 2700 K	KENALL 3714 OR LITHONIA 202 2/7PL LP

SEE TYPICAL CLASSROOM LAYOUT FOR LOCATIONS OF ALL DEVICES.
FIXTURE MOUNTING SHALL COMPLY WITH CALIFORNIA SEISMIC REGULATIONS.

O — THE LIGHTS FOR EACH ROOM OVER 250 SQUARE FEET SHALL BE CONTROLLED BY ULTRASONIC OCCUPANCY SENSOR. WATT STOPPER W–500A, W–1000A, OR W–2000A (OR EQUAL) BASED ON THE ROOM SIZE. IN CONJUCTION WITH BI–LEVEL SWITCHING.

ELECTRICAL

1. Electrical service drop and connections supplied by others.
2. Manufacturer to provide stub–out from back of electrical panel through the exterior wall for receiving either underground or overhead service & fitting for grounding cable.
3. Electrical panel board shall be recess mounted inside the building. Sized to accommodate all connected loads including spaces as shown. Overcurrent protective devices in the panel boards have adequate short circuit interrupting capacity. All buses including bus shall be copper or aluminum.
4. 2x4 Flourescent fixtures shall be steel frame, lens shall be hinged and locked in place by two locking devices. The lens diffusers shall be KHS, Inc. #KSH–12, Carolite, Inc. #C–12 or Plaskolite, Inc. #PL21A. Minimum lens thickness shall be .125 inch.
5. Flourescent ballast shall be energy saver while maintaining full light output, class "P" equipped with thermal protectors, guaranteed against failure for (2) years and be replaced from inside the fixture.
6. Clock – 12" dial clock on clock outlet.
   A) Clock shall be General Electric model 2912 129V 60 cycle
   B) Clock outlet shall be Bryant #2828 or equal with seperable hanging clip & app'd recept.

The H.V.A.C. unit feeder circuit – panel circuit breaker, feeder wire, unit disconnect and fuses (where used) – is to be coordinated with the name plate data at the time ofmanufacture. H.V.A.C. units having KVA ratings larger than that indicated on this panel schedule will not be allowed to be installed on this building. If 60 degrees C. wire is to be used in this installation, calculations

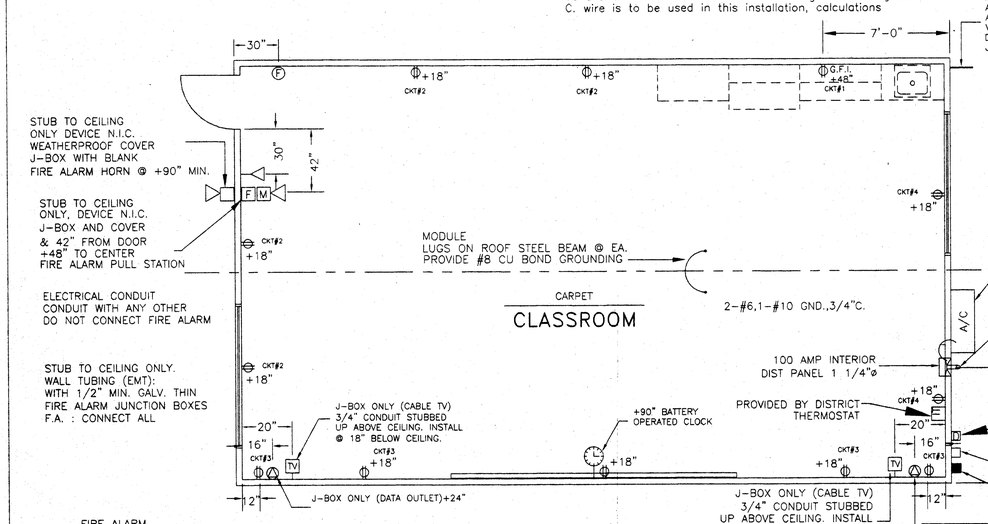

2 / E1 ELECTRICAL PLAN
1/4" = 1'-0"

FIRE ALARM
Junction boxes – Galvanized sheet metal, square or rectangular with blank covers. Locate one box at rear of building near main electrical panel at +18– above finish floor for future connection.
Covers – Install gasketed, metal, waterproof, finish covers at exterior locations. Install finish covers at interior locations.

If testing results determine fire alarm audibility does not meet 15db over ambient noise levels, additional fire alarm signaling devices may be required by the enforcing anency

NOTE:
THE PROJECT ARCHITECT SHALL BE RESPONSIBLE FOR THE PLACEMENT OF HEAT AND SMOKE DETECTORS WHEN THE SITE SPECIFIC PROJECT IS REQUIRED TO MEET THE PROVISIONS OF SB 575

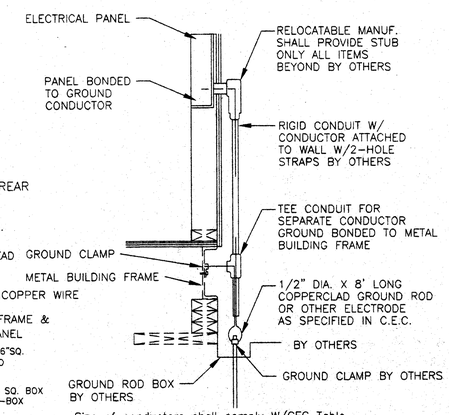

Size of conductors shall comply W/CEC Table
Bond separate conductors from ground rod to electrical panel & metal building from.
In addition to the detail shown above, bond the electrical ground to metal water pipe embedded @ least 10' into the soil if available.
Electrical bond modules together W/#8 CU @ modline. By manufacturer. Check resistance to ground. If resistance exceeds 25 OHMS, install additional ground rods as required. Grounding detail per I–R M–3
INSPECTOR TO WITTNESS GROUNDING TEST.

A / E1 BUILDING GROUND DETAIL
N.T.S.

120/208 VOLT IS EXCEPTABLE

VOLTS: 120/240 SINGLE PHASE				PANEL: A						FEED: EXTERIOR LB			
MAIN: 100 AMP MAIN BKR.				LOCATION: INTERIOR						MOUNTING: FLUSH			
LOAD	WATTS A	WATTS B	BRK. AMP	P	CIR	A	B	CIR	BRK. P	BRK. AMP	WATTS A	WATTS B	LOAD
LIGHTS, FLUORESCENT	570		15	1	1			2	2	70	6600		A/C HVAC UNIT
LIGHTS, FLURESCENT		570	15	1	3			4	2	70		6600	
EXTERIOR LIGHT & CLOCK	100		15	1	5			6	2	20			FIRE ALARM SPACE
DUPLEX RECEPT.		720	15	1	7			8					
DUPLEX RECEPT.	720		15	1	9			10					
SPACE					11			12					
					13			14					
					15			16					
PHASE WATTAGE	1390	1290			17			18			6600	6600	PHASE WATTAGE
TOTAL WATTS "A"LEG: 7990				TOTAL WATTS A+B= 15880							TOTAL WATTS "B" LEG 7890		
TOTAL WATTS: 15880			67 AMPS			120/240V			SINGLE PHASE				100AMP BUS.

FEEDERS: TO BE RUN BY THE DISTRICT EITHER UNDERGROUND OR OVERHEAD. SEE SITE ELEC. PLAN.

3 / E1 ELECTRICAL DISTRIBUTION PLAN
1/4" = 1'-0"

NOTE
STUB OUT LOCATIONS FOR ELECTRICAL PANEL, FIRE ALARM, AND DATA BOXES. LOCATIONS SHOWN ARE DIAGRAMITICAL ONLY. EXACT LOCATIONS MAY VARY +/– SEVERAL FEET. PLEASE CONTACT AMERICAN MODULAR SYSTEMS FOR EXACT LOCATIONS. POINT OF CONNECTION WILL BE AT FACE OF BUILDING.

IDENTIFICATION STAMP
DIV. OF THE STATE ARCHITECT
APP03- 108679
AC SW FLS CO SS AS
DATE JUL 2 6 2005

FILE NO.
IDENTIFICATION STAMP
DIV. OF THE STATE ARCHITECT
OFFICE OF REGULATION SERVICES
AC____ FLS____ SS____
DATE____

BASED ON PC 02–104915

24 X 40
RELOCATABLE
CLASSROOMS

American Modular Systems Inc.
787 Sprockels Ave. Manteca, CA 95336
(209)825-1921 Fax (209)825-7018
americanmodular.com

LICENSED ARCHITECT RANDALL PATRICK DAVANON No. C 12631 Ren. 12-31-07 STATE OF CALIFORNIA

CUSTOMER:
BAKERSFIELD CITY SCHOOL DISTRICT

ELECTRICAL PLAN & NOTES

DATE: 11/12/03
SCALE: NONE
DRAWN BY: RS
CHECKED BY:
CHECKED BY:
SERIAL NO.

REVISIONS

NO	DATE	DESCRIPTION	NO	DATE	DESCRIPTION

PROJECT No.

SHEET No. E1