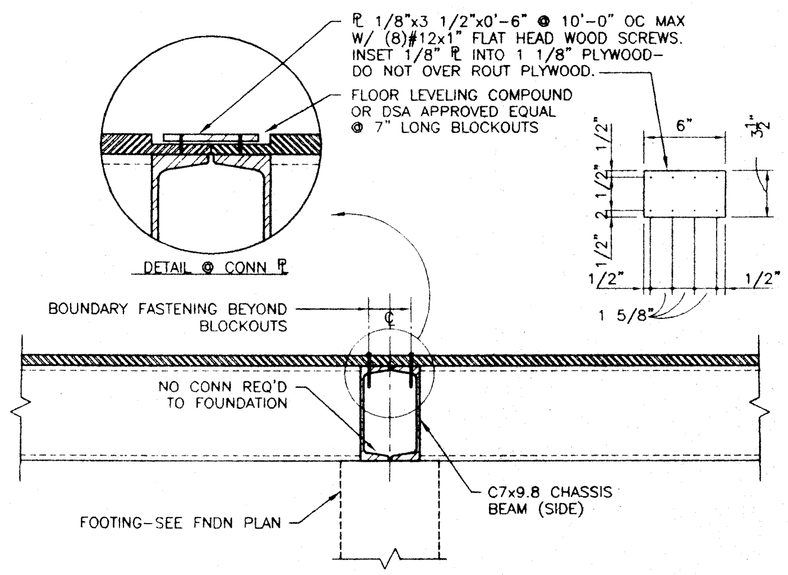

5/S2 DETAIL

1 1/2" = 1'-0"

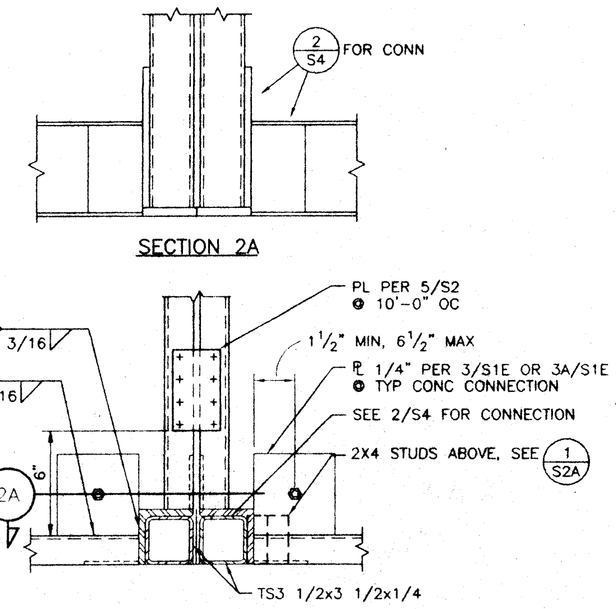

2/S2 PLAN DETAIL

NO SCALE

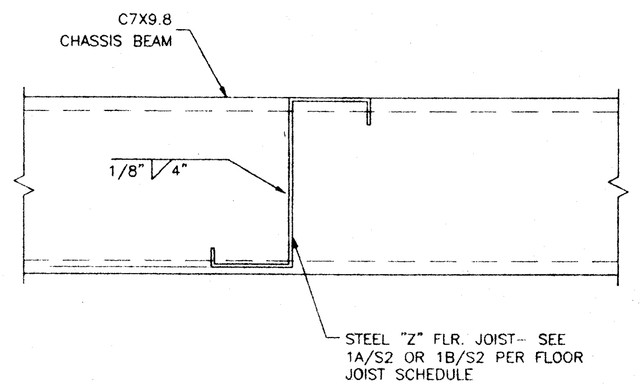

1/S2 DETAIL

NO SCALE

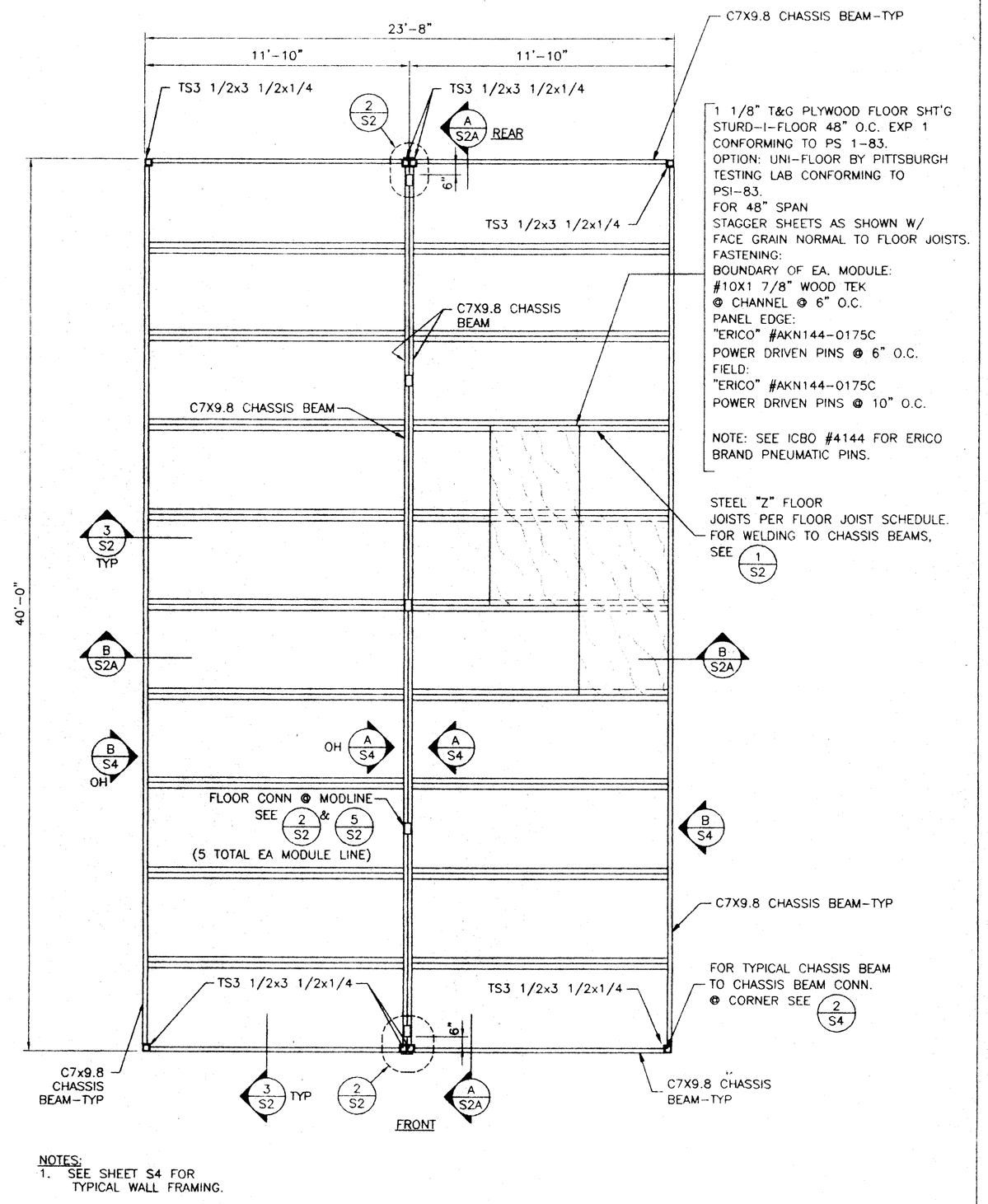

NOTES:
1. SEE SHEET S4 FOR TYPICAL WALL FRAMING.

A/S2 FLOOR FRAMING PLAN

1/4" = 1'-0"

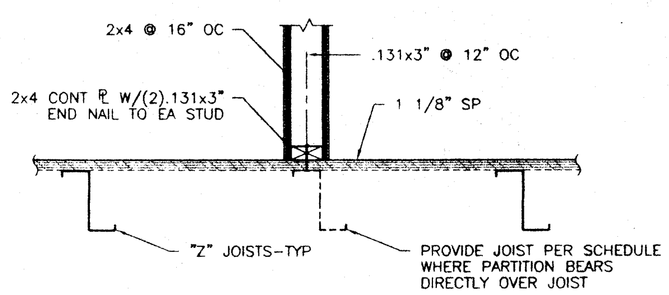

TYP INTERIOR NON-BEARING WALL BASE

6/S2 DETAIL

1 " = 1'-0"

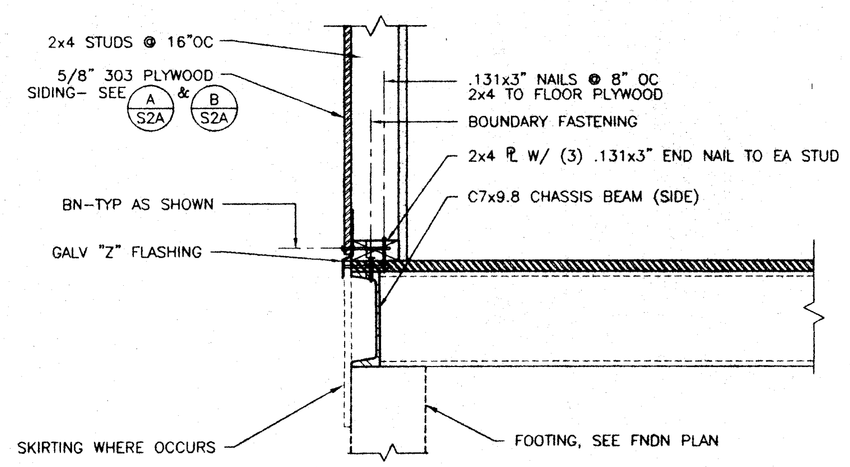

3/S2 DETAIL

1 1/2" = 1'-0"

Z SECTION PROPERTIES
A=0.91 IN^2
SX=1.84 IN^3
IX=6.25 IN^4

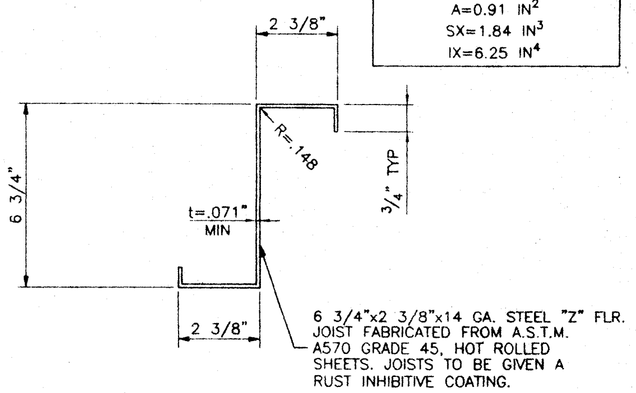

14 GA JOIST

1A/S2 DETAIL

NO SCALE

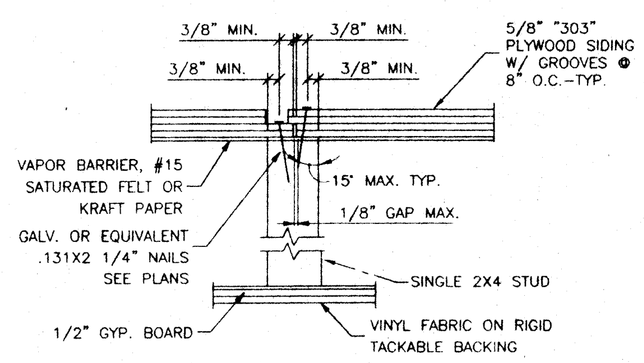

TYPICAL SIDING JOINT

4/S2 DETAIL

NO SCALE

Z SECTION PROPERTIES
A=1.36 IN^2
SX=2.70 IN^3
IX=8.77 IN^4

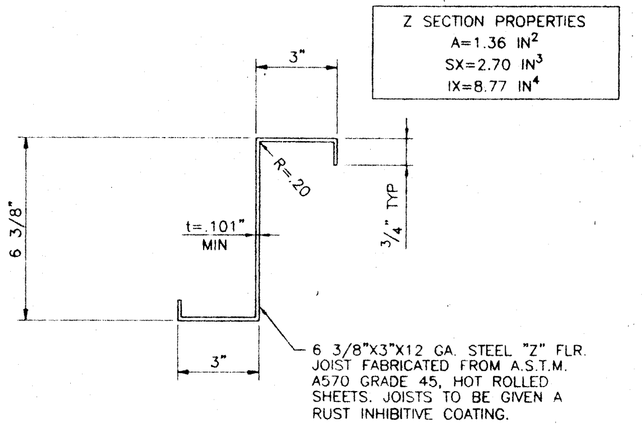

12 GA JOIST

1B/S2 DETAIL

NO SCALE

FLOOR JOIST SCHEDULE

LIVE LOAD	SPACING	
	14 GA JOIST	12 GA JOIST
50 PSF	48" OC	48" OC
100 PSF	24" OC	24" OC
125 PSF	-	24" OC

NOTES:
1. FOR JOISTS SEE 1A/S2 AND 1B/S2.
2. SPACING IS TO CENTER LINE OF TOP FLANGE.
3. PROVIDE 12 GA JOIST WHERE PARTITION BEARS DIRECTLY OVER JOIST.

IDENTIFICATION STAMP
DIV. OF THE STATE ARCHITECT
APP03-
AC FL3 SS
DATE

FILE NO. PC
IDENTIFICATION STAMP
DIV. OF THE STATE ARCHITECT
OFFICE OF REGULATION SERVICES
APPLICATION NO.
02-101837
AC FLS SS
DATE JAN 1 2 2000

THESE DRAWINGS AND / OR SPECIFICATIONS AND / OR CALCULATIONS FOR THE ITEMS LISTED BELOW HAVE BEEN PREPARED BY OTHER DESIGN PROFESSIONALS WHO ARE LICENSED AND AUTHORIZED TO PREPARE SUCH DRAWINGS IN THIS STATE. THESE DOCUMENTS HAVE BEEN EXAMINED AND HAVE BEEN FOUND TO MEET THE APPROPRIATE REQUIREMENTS OF TITLE 24, CALIFORNIA CODE OF REGULATIONS AND THE PROJECT SPECIFICATIONS

THE ITEMS LISTED BELOW ARE ACCEPTABLE FOR INCORPORATION INTO THE CONSTRUCTION OF THIS PROJECT FOR WHICH I AM THE INDIVIDUAL DESIGNATED TO BE GENERALLY RESPONSIBLE (OR FOR WHICH I HAVE BEEN DELEGATED RESPONSIBILITY) FOR THIS PORTION OF THE WORK.

A LIST OF ITEMS HAS BEEN REVIEWED AND ACCEPTED. (FOR DRAWINGS, A LIST OF ALL ACCEPTED DRAWINGS ARE ATTACHED, SEE SHEET NO. T-1)

LICENSED ARCHITECT C-18756 STATE OF CALIFORNIA

STEPHEN W. CONRIN, CALIFORNIA DATE

24 x 40
RELOCATABLE
CLASSROOM

American Modular Systems

REGISTERED PROFESSIONAL ENGINEER Kenneth A. Luttrell No. 1418 EXP. 3-31-01 Structural Engineer STATE OF CALIFORNIA

CUSTOMER:

FLOOR FRAMING
PLAN AND DETAILS

DATE: 12/27/99
SCALE: AS NOTED
DRAWN BY: PWD
DESIGNED BY: MDB
CHECKED BY: KAL
SERIAL NO.

REVISIONS

NO	DATE	DESCRIPTION	NO	DATE	DESCRIPTION
△			△		
△			△		
△			△		
△			△		

PROJECT No. 99100

SHEET No. S2

M:\99100\ACAD\STRUD\S2.dwg 12-27-99 10:58:13 pm EST