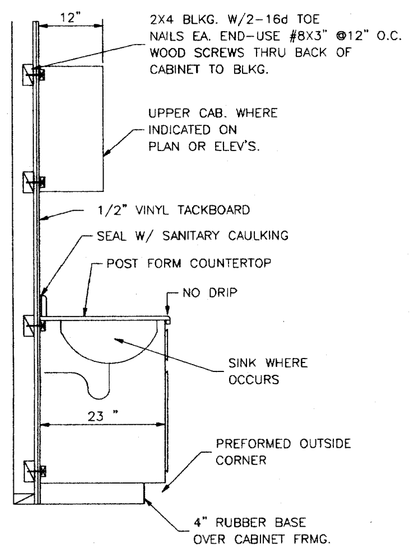

TYPICAL CABINET
CROSS SECTION (A/4)

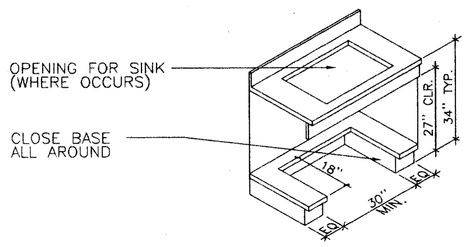

NOTES:
- DOORS NOT SHOWN FOR CLARITY. DOORS ARE TO BE PROVIDED.
- MODIFY BASE AS SHOWN FOR WHEELCHAIR ACCESS.
- ALL EXTERIOR SURFACES TO BE PLASTIC LAMINATE.

DISABLED ACCESSIBLE CABINET (B/4)
N.T.S.

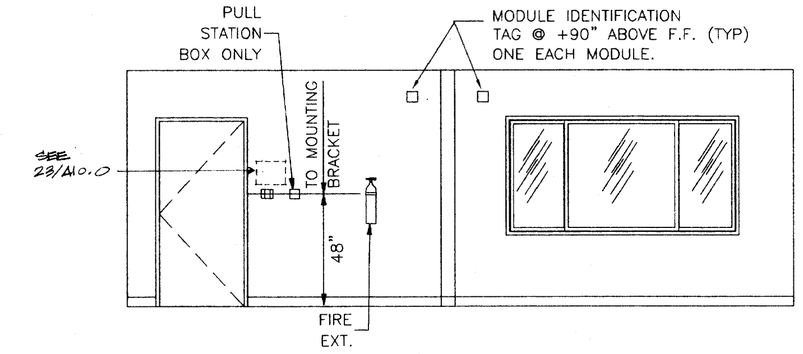

(1/4) INTERIOR ELEVATION
1/4" = 1'-0"

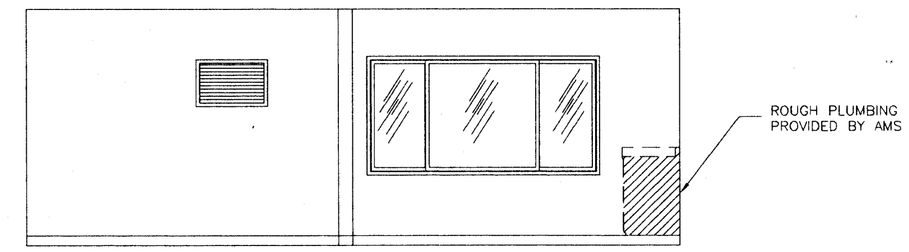

(2/4) INTERIOR ELEVATION
1/4" = 1'-0"

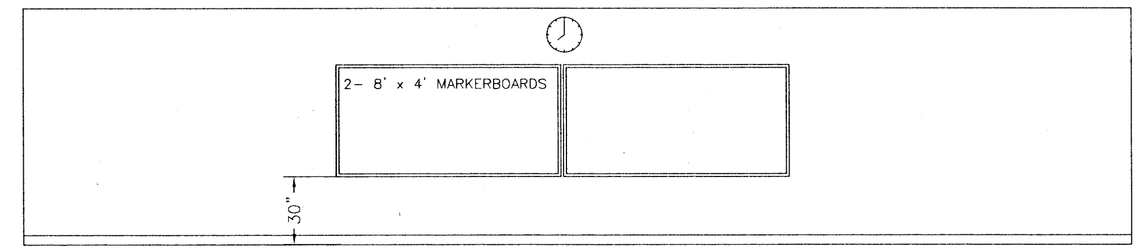

(3/4) INTERIOR ELEVATION
1/4" = 1'-0"

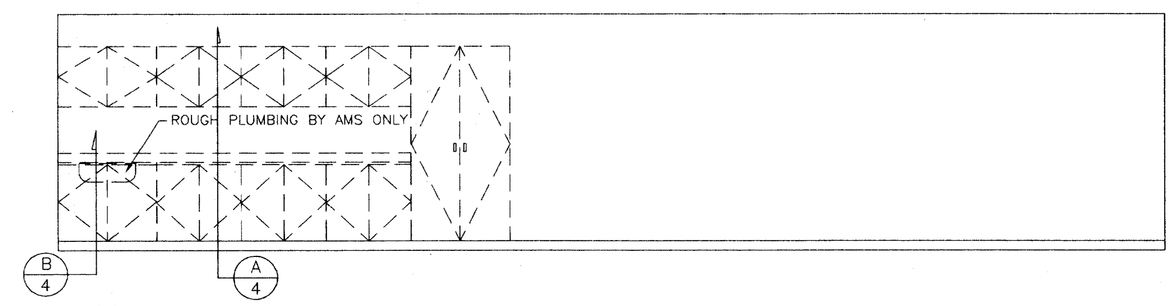

(4/4) INTERIOR ELEVATION
1/4" = 1'-0"

DOOR SCHEDULE

DOOR NO.	OPENING SIZE	DOOR TYPE	DOOR THK.	DOOR MAT'L	DOOR FRAME MAT'L	DETAILS SHT. 1 HEAD	DETAILS SHT. 1 JAMB	DETAILS SHT. 1 THRESHOLD	GLAZING	RATING	REMARKS
1	3'-0"X6'-8"	A 1	1 3/4"	H.M	H.M				N/A	N/A	

DOOR TYPES

A — EXTERIOR

B — INTERIOR NOT USED

FINISH SCHEDULE

ROOM NO.	ROOM NAME	FLOOR	BASE	WALLS NORTH	WALLS EAST	WALLS SOUTH	WALLS WEST	CEILING	MISC.	CLG. HT.	REMARKS
01	CLASSROOM	F2	B1	W1	W1	W1	W1	C1	N/A	8-6	N/A

FINISHES

FLOOR FINISHES
- F1 VINYL COMPOSITION TILE
- F2 CARPETING
- F3 SHEET VINYL

BASE FINISHES
- B1 RUBBER COVE BASE

REMARKS
- 1 SEE PLAN FOR LOCATION OF FLOOR FINISHES

WALL FINISHES
- W1 1/2" VINYL WRAPPED SOUND BOARD OVER 1/2" GYPSUM BD.
- W2 1/8" MARLITE OVER 1/2" GYPSUM BOARD

CEILING FINISHES
- C1 SUSPENDED LAY-IN ACOUSTIC TILE

MISCELLANEOUS FINISHES

THESE DRAWINGS AND / OR SPECIFICATIONS AND / OR CALCULATIONS FOR THE ITEMS LISTED BELOW HAVE BEEN PREPARED BY OTHER DESIGN PROFESSIONALS WHO ARE LICENSED AND AUTHORIZED TO PREPARE SUCH DRAWINGS IN THIS STATE. THESE DOCUMENTS HAVE BEEN EXAMINED AND HAVE BEEN FOUND TO MEET THE APPROPRIATE REQUIREMENTS OF TITLE 24, CALIFORNIA CODE OF REGULATIONS AND THE PROJECT SPECIFICATIONS

THE ITEMS LISTED BELOW ARE ACCEPTABLE FOR INCORPORATION INTO THE CONSTRUCTION OF THIS PROJECT FOR WHICH I AM THE INDIVIDUAL DESIGNATED TO BE GENERALLY RESPONSIBLE (OR FOR WHICH I HAVE BEEN DELEGATED RESPONSIBILITY) FOR THIS PORTION OF THE WORK.

A LIST OF ITEMS HAS BEEN REVIEWED AND ACCEPTED. (FOR DRAWINGS, A LIST OF ALL ACCEPTED DRAWINGS ARE ATTACHED ON SHEET NO. TS-1).

REGISTERED ARCHITECT STEPHEN J. CORBIN C-15798 STATE OF CALIFORNIA

STEPHEN J. CORBIN, AIA — DATE

FILE NO.
IDENTIFICATION STAMP
DIV. OF THE STATE ARCHITECT
OFFICE OF REGULATION SERVICES
03-106606
AC. M FLS. SS.
DATE APR 4 2003

~~BASED ON PC# 02-101837~~

24 X 40 PC
RELOCATABLE
CLASSROOM

American Modular Systems

CUSTOMER:
BAKERSFIELD UNIFIED SCHOOL DISTRICT

INTERIOR ELEVATIONS AND OPTIONS

DATE: 06-20-02
SCALE: NONE
DRAWN BY: Y.A.
CHECKED BY:
CHECKED BY:
SERIAL NO.

REVISIONS

NO	DATE	DESCRIPTION	NO	DATE	DESCRIPTION
△			△		
△			△		
△			△		
△			△		

PROJECT No.

SHEET No.
4