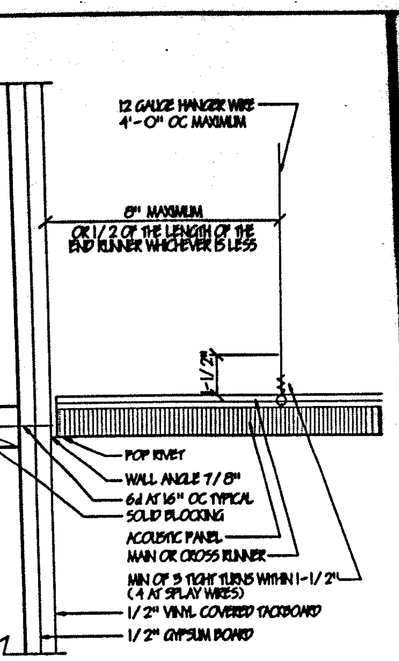

TYPICAL FIXED SIDE SCALE 3"=1'-0"

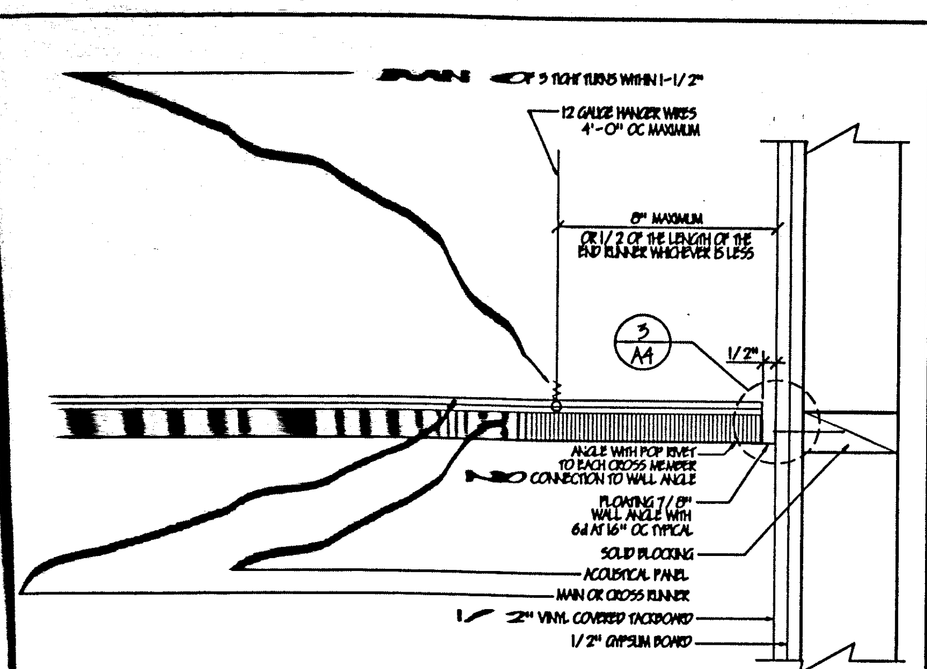

2 TYPICAL FREE SIDE SCALE 3"=1'-0"

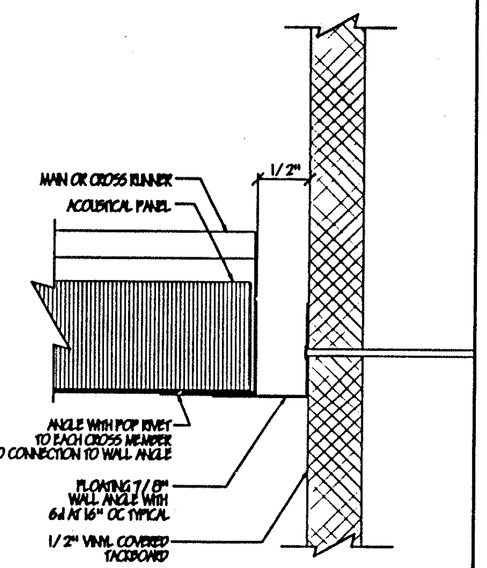

3 TYPICAL FREE CONN. SCALE 1"=1'

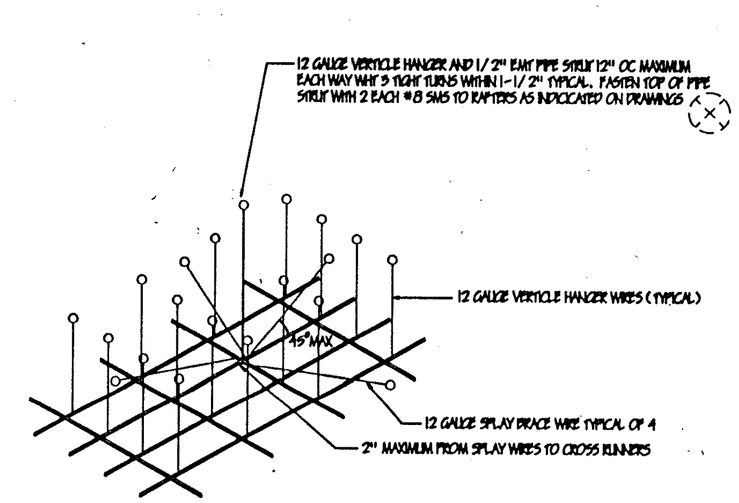

4 ATTACHMENT FOR CEILING GRID NOT TO SCALE

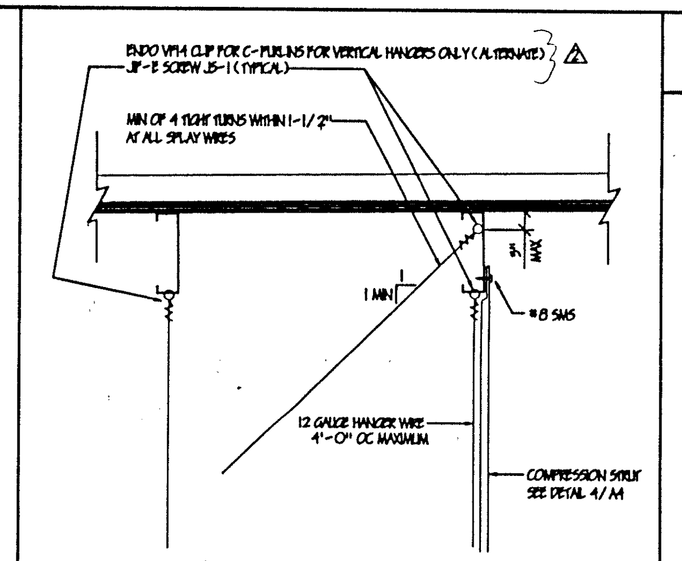

5 ATTACHMENT AT ROOF SCALE 1-1/2"=1'-0"

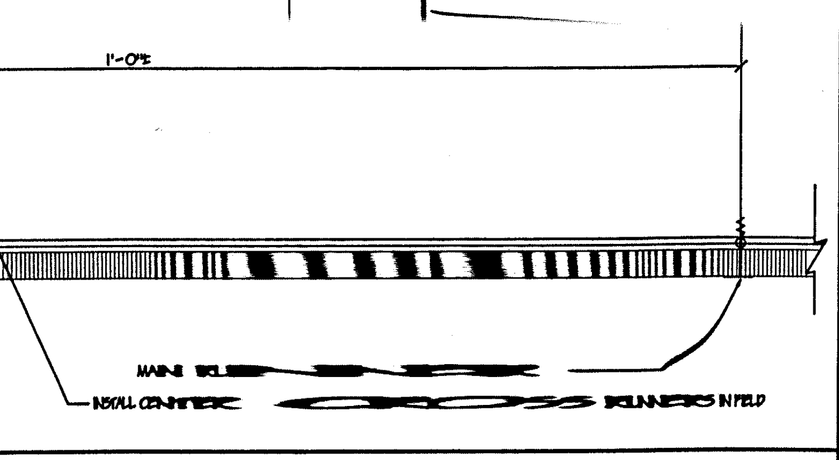

GRID AT MOD LINE SCALE 3"=1'-0"

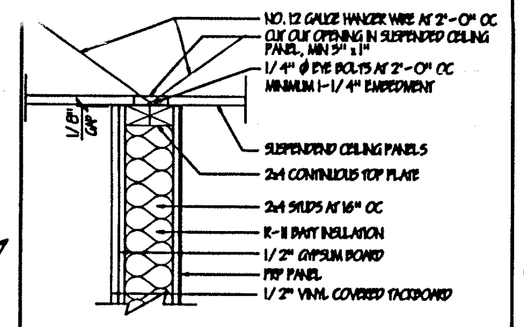

7 INTERIOR WALL SCALE 1-1/2"=1'-0"

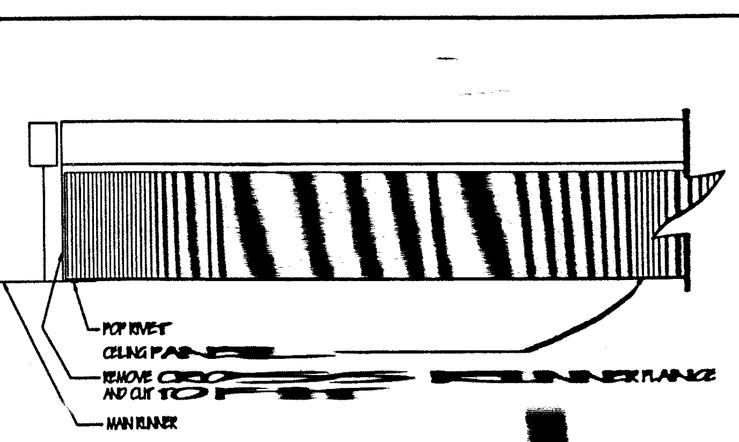

GRID AT MOD LINE SCALE 1"=1'

9

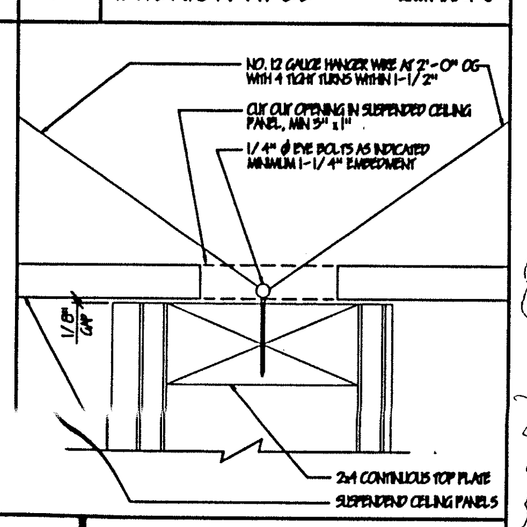

WALL CONNECTION SCALE 3"=1'-0"

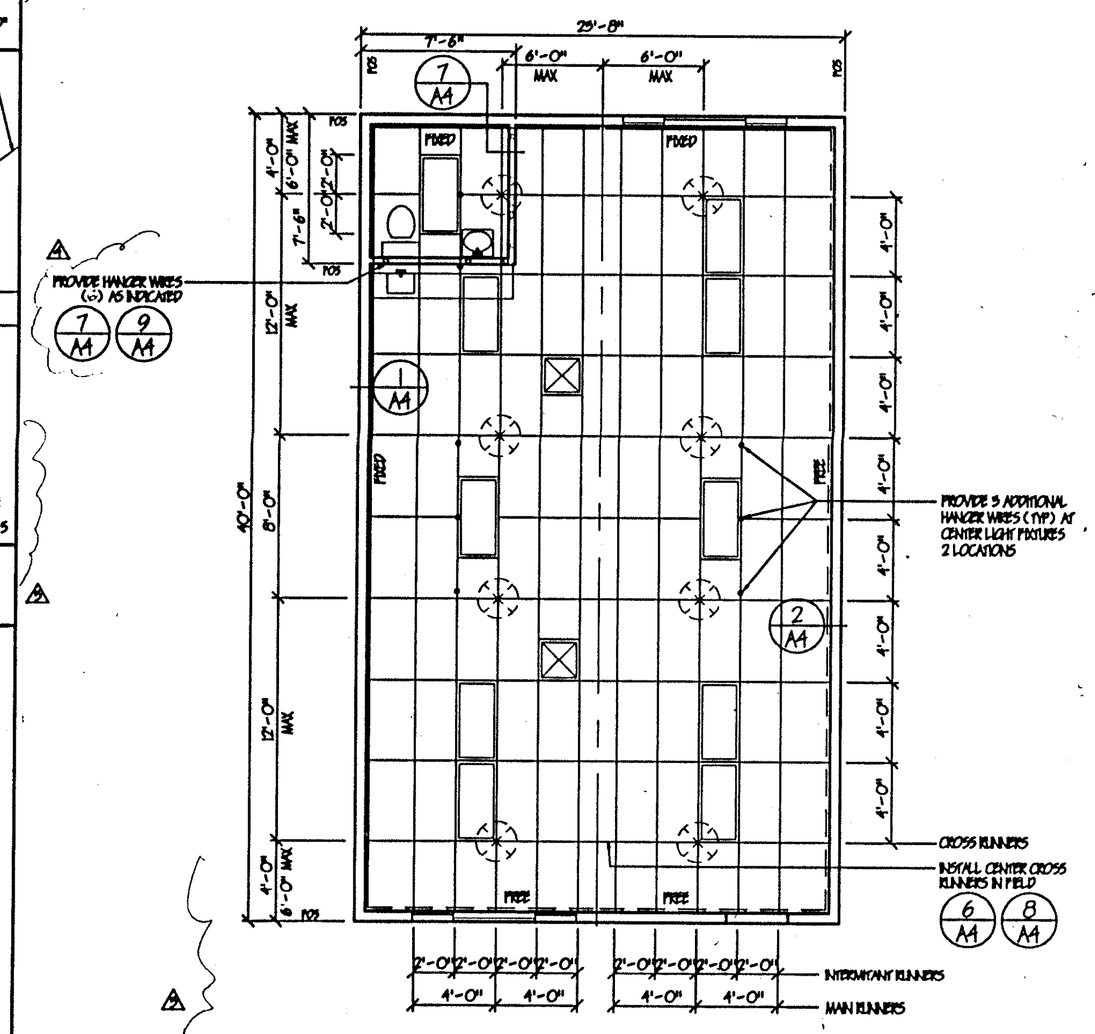

24 X 40 ALT. REFLECTED CEILING PLAN SCALE 3/16"=1'-0"

(REVERSE SIMILAR)

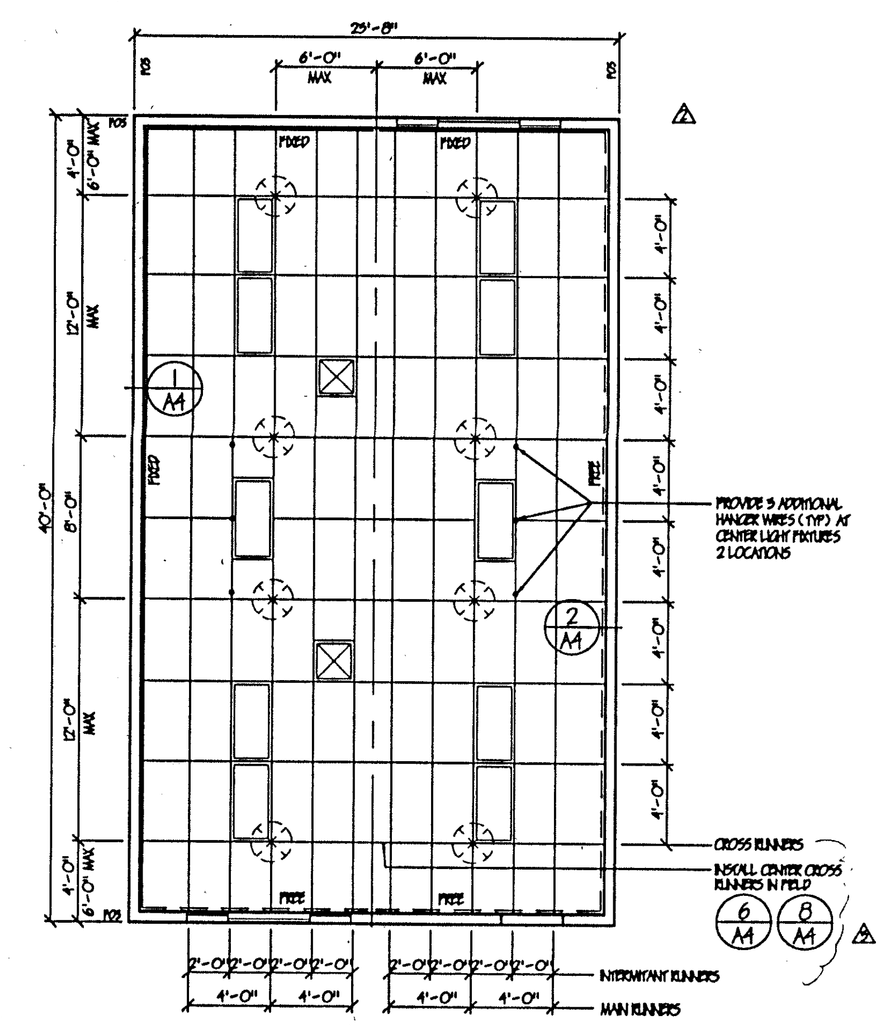

24 X 40 REFLECTED CEILING PLAN SCALE 3/16"=1'-0"

(REVERSE SIMILAR)

THESE DRAWINGS AND / OR SPECIFICATIONS AND / OR CALCULATIONS FOR THE ITEMS LISTED BELOW HAVE BEEN PREPARED BY OTHER DESIGN PROFESSIONALS WHO ARE LICENSED AND AUTHORIZED TO PREPARED SUCH DRAWINGS IN THIS STATE. THESE DOCUMENTS HAVE BEEN EXAMINED BY ME AND HAVE BEEN FOUND TO MEET THE APPROPRIATE REQUIREMENTS OF TITLE 24, CALIFORNIA CODE OF REGULATIONS AND THE PROJECT SPECIFICATIONS PREPARED BY ME.
THE ITEMS LISTED BELOW ARE ACCEPTABLE FOR INCORPORATION INTO THE CONSTRUCTION OF THIS PROJECT FOR WHICH I AM THE INDIVIDUAL DESIGNATED TO BE IN GENERAL RESPONSIBLE CHARGE (OR FOR WHICH I HAVE BEEN DELIGATED RESPONSIBILITY FOR THIS PORTION OF THE WORK).
LIST ITEMS REVIEWED AND ACCPTED. (FOR DRAWINGS, A LIST OF ALL ACCEPTED DRAWINGS ARE TO BE ATTACHED).

LICENSED ARCHITECT STEPHEN V. GOBLE No. C-16788 REN. 11/30/99 STATE OF CALIFORNIA

Stephen V. Goble, M.ARC, AIA DATE 1-15-99

LICENSE # C-16788

EXP. DATE 11/30/99

GENERAL NOTES

MAIN RUNNERS AT 4'-0" ON CENTER WITH 12GA HANGER WIRES AT END OF EACH RUNNER.

AT END OF ROWS OF RUNNERS A 12GA HANGER WIRE SHALL BE ATTACHED WITHIN 8" OUT OF WALL, OR 1/4 LENGTH OF END TEE.

VERTICAL WIRES MORE THAN 1 IN 6 OUT OF PLUMB SHALL HAVE COUNTER BRACING WIRES.

PROVIDE 2-12GA SLACK WIRES TO HOLDING OF ALL LIGHT FIXTURES AT DIAGONAL CORNERS. WIRES SHALL BE ATTACHED TO STRUCTURE. ATTACH WIRES TO LIGHT FIXTURES WITH #8 SHEET METAL SCREW AT EACH CORNER.

RUNNERS MAY BE ATTACHED TO WALLS AT ONLY TWO ADJACENT WALLS. ALL OTHER CONDITIONS MUST PROVIDE A CLEARANCE OF 1/2" BETWEEN END OF RUNNERS AND FACE OF WALL.

CEILING AREAS SHALL HAVE 4-WAY SPLAYS AT LOCATIONS INDICATED. WIRES TO BE TAUT, BUT NO DEFORMATION OF GRID.

ALL FINISHES SHALL COMPLY WITH CBC CHAPTERS 3, 6, 7, 8, AND 10

DUCTWORK SHALL BE RIGIDLY ATTACHED TO BUILDING AND SHALL NOT BE CLOSER THAN 6" TO HANGER WIRES.

REGISTERS SHALL BE POSITIVELY ATTACHED WITH 4-10GA SHEET METAL SCREWS TO GRID.

CEILING PANELS, 2'x4' LAY-IN PANELS, ASTM FLAME SPREAD CLASS I (0-25), FLAME SPREAD SMOKE DEVELOPMENT TEMPERITY LESS THAN 450.

△1 MAIN RUNNERS, ARMSTRONG PRELUDE XL, 7501 HD, OR EQUAL.

△2 INTERMEDIAT RUNNERS, ARMSTRONG PRELUDE XL, XL-7542, OR EQUAL.

△3 CROSS RUNNERS, ARMSTRONG PRELUDE XL, XL-7528, OR EQUAL.

WALL ANGLES, PSK 8000/ 8501, CSK 8000/ 8501, OR EQUAL.

ABBREVIATIONS

AFF	ABOVE FINISH FLOOR
AL OR ALUM	ALUMINUM
ALT	ALTERNATE
CONN	CONNECTION
GA	GAUGE
HM	HOLLOW METAL
MAX.	MAXIMUM
MIN.	MINIMUM
NO.	NUMBER
NE	NOT EXACT
OVHG	OVERHANG
PK	PANE
SMS	SHEET METAL SCREW

LEGEND

MAIN RUNNER
CROSS RUNNER — T BAR CEILING
INDICATED FIXED SIDE
INDICATED FREE SIDE
SPLAY WIRE - 4 WAY
2'x4' RECESSED LIGHT FIXTURE
SUPPLY AIR DIFFUSER

APPROVALS

F.K. FEB 1 1 1999

IDENTIFICATION STAMP
REV. OF THE STATE ARCHITECT
OFFICE OF REGULATION SERVICES
PC 330
NO. 118 PLS 302 ES KAL
DATE 12/4/98
NOV 20 1998 PSV #6

NORMAN A. GEIGER
AIA, CSI, CDT, ICBO
P.O. BOX 41054
Sacramento, CA 95841
(916) 332-2453 FAX
(916) 332-2453 PHONE
GRAFICS ARCHITECTURAL SERVICES
GEIGER

LICENSED ARCHITECT NORMAN A. GEIGER C-20915 12-97 STATE OF CALIFORNIA

PACESETTER INDUSTRIES, INC.
P.O. BOX 1131, MODESTO, CA 95353 (209) 521-1600

24x40 RELOCATABLE BUILDING

SHEET CONTENTS
REFLECTED CEILING PLAN
ALT. REFLECTED CEILING PLAN
GENERAL NOTES
LEGEND
DETAILS

DATE:		APRIL 28, 1997
REV. #1	△1	MAY 15, 1997
REV. #2	△2	JUNE 20, 1997
REV. #3	△3	AUGUST 1, 1997
REV. #4	△4	AUGUST 26, 1997
DRAWING SCALE:		AS SHOWN
PROJECT NUMBER:		97-09

SHEET A4 OF