SITE IMPROVEMENTS FOR (2) - 24' x 40' MODULAR CLASSROOMS AT HORACE MANN ELEMENTARY SCHOOL

2710 NILES ST, BAKERSFIELD, CA 93306

FOR

BAKERSFIELD CITY SCHOOL DISTRICT

1300 BAKER STREET, BAKERSFIELD, CALIFORNIA, 93305

MARK	DATE	REVISIONS
1		
2		
3		

CHECK AND VERIFY ALL DIMENSIONS BEFORE PROCEEDING WITH THE WORK. REPORT DISCREPANCIES TO THE ARCHITECT. ALL CONSTRUCTION SHALL CONFORM TO THE C.B.C.

SYMBOLS

- GRID LINES
- DOOR SYMBOL / DOOR NUMBER
- WINDOW SYMBOL / WINDOW NUMBER
- REVISION NUMBER
- WORK POINT CONTROL PT. / DATUM PT.
- MATCH LINE (SHADED PORTION IS THE SIDE SHOWN)
- NORTH ARROW
- SECTION LETTER / SHEET NUMBER
- DETAIL NUMBER / SHEET NUMBER
- ROOM NUMBER / NAME / INTERIOR ELEV. LOCATION
- REVISED GRADE / EXISTING GRADE
- SAFE DISPERSAL AREA - "A" / SEE SHT A-10 FOR LOCATION AND SIZE CALCULATIONS

GENERAL NOTES

NOTHING IN THE DRAWINGS AND/OR THE SPECIFICATIONS SHALL BE CONSTRUED TO PERMIT AN INSTALLATION THAT COULD BE IN VIOLATION OF THE APPLICABLE CODES, ORDINANCES, REGULATIONS, RESTRICTIONS, ETC. ALL WORK PERFORMED UNDER THIS CONTRACT SHALL BE IN FULL ACCORDANCE WITH ALL APPLICABLE CODES, ORDINANCES, REGULATIONS.

THE CONTRACTOR SHALL VERIFY ALL DIMENSIONS IN THE FIELD AND SHALL NOTIFY THE ARCHITECT OF ANY DISCREPANCIES IMMEDIATELY. DISCREPANCIES BETWEEN FIELD CONDITIONS AND THE DRAWINGS SHALL CAUSE THE CONTRACTOR TO NOTIFY THE ARCHITECT PRIOR TO MAKING ANY CHANGES IN THE WORK.

THE DRAWINGS, IDEAS, DESIGNS AND ARRANGEMENTS REPRESENTED HEREBY ARE AND SHALL REMAIN THE PROPERTY OF THE ARCHITECT/OWNER AND NO PART THEREOF SHALL BE COPIED OR DISCLOSED TO OTHERS OR USED IN CONNECTION WITH ANY WORK OR PROJECT OTHER THAN THE SPECIFIC PROJECT FOR WHICH THESE DOCUMENTS HAVE BEEN PREPARED AND DEVELOPED WITHOUT THE WRITTEN CONSENT OF THE ARCHITECT. VISUAL CONTACT WITH THESE DRAWINGS CONSTITUTES CONCLUSIVE EVIDENCE OF ACCEPTANCE OF THESE RESTRICTIONS.

WRITTEN DIMENSIONS ON THESE DRAWINGS SHALL HAVE PRECEDENCE OVER SCALED DIMENSIONS. CONTRACTOR SHALL VERIFY AND BE RESPONSIBLE FOR ALL DIMENSIONS AND CONDITIONS ON THE JOB AND THE ARCHITECT MUST BE NOTIFIED OF ANY VARIATIONS FROM THE DIMENSIONS AND CONDITIONS SHOWN BY THESE DRAWINGS.

MISPLACEMENT, ADDITION, OR OMISSION OF ANY WORD, LETTER, FIGURE, PUNCTUATION MARK, ETC., SHALL IN NO WAY CHANGE OR ALTER THE TRUE INTENT, SPIRIT, OR MEANING OF THE DRAWINGS. THE CONTRACTOR SHALL STUDY AND COMPARE ALL DRAWINGS AND SHALL REPORT ANY ERRORS, OMISSIONS, OR INCONSISTENCIES TO THE ARCHITECT BEFORE COMMENCING WORK IN THAT AREA.

ALL WORK SHALL BE IN CONFORMANCE WITH THE CURRENTLY ADOPTED EDITION OF THE:

PART 1	2016 CALIFORNIA BUILDING STANDARDS ADMINISTRATIVE CODE, TITLE 24 C.G.R.
PART 2	2016 CALIFORNIA BUILDING CODE, TITLE 24 C.G.R. (2015 INTERNATIONAL BUILDING CODE, VOLUME 1 AND 2 WITH CALIFORNIA AMENDMENTS)
PART 3	2016 CALIFORNIA ELECTRICAL CODE, TITLE 24 C.G.R. (2014 NATIONAL ELECTRICAL CODE OF THE NATIONAL FIRE PROTECTION ASSOCIATION, NFPA)
PART 4	2016 CALIFORNIA MECHANICAL CODE, TITLE 24 C.G.R.(2015 UNIFORM MECHANICAL CODE OF THE INTERNATIONAL ASSOCIATION OF PLUMBING AND MECHANICAL OFFICIALS, IAPMO)
PART 5	2016 CALIFORNIA PLUMBING CODE, TITLE 24 C.G.R. (2015 UNIFORM PLUMBING CODE OF THE INTERNATIONAL ASSOCIATION OF PLUMBING AND MECHANICAL OFFICIALS, IAPMO AND CALIFORNIA AMENDMENTS)
PART 6	2016 CALIFORNIA ENERGY CODE, TITLE 24 C.G.R.
PART 7	CURRENTLY VACANT
PART 8	2016 CALIFORNIA HISTORICAL BUILDING CODE, TITLE 24 C.G.R
PART 9	2016 CALIFORNIA FIRE CODE, TITLE 24 C.G.R (2015 INTERNATIONAL FIRE CODE OF THE INTERNATIONAL CODE COUNCIL)
PART 10	2016 CALIFORNIA EXISTING BUILDING CODE, TITLE 24 C.G.R. (2015 INTERNATIONAL EXISTING BUILDING CODE OF THE INTERNATIONAL CODE COUNCIL, WITH AMENDMENTS)
PART 11	2016 CALIFORNIA GREEN BUILDING STANDARDS CODE (CAL GREEN CODE), TITLE 24 C.G.R.
PART 12	2016 CALIFORNIA REFERENCE STANDARDS CODE, TITLE 24 C.G.R.

PARTIAL LIST OF APPLICABLE STANDARDS:

NFPA 10	STANDARD FOR PORTABLE FIRE EXTINGUISHERS	2013 EDITION
NFPA 13	AUTOMATIC SPRINKLER SYSTEMS (CALIFORNIA AMENDED)	2016 EDITION
NFPA 14	STANDPIPE SYSTEMS (CALIFORNIA AMENDED)	2016 EDITION
NFPA 17	DRY CHEMICAL EXTINGUISHING SYSTEMS	2017 EDITION
NFPA 17A	WET CHEMICAL EXTINGUISHING SYSTEMS	2017 EDITION
NFPA 20	STATIONARY PUMPS	2016 EDITION
NFPA 24	PRIVATE FIRE SERVICE MAINS (CALIFORNIA AMENDED)	2016 EDITION
NFPA 72	NATIONAL FIRE ALARM CODE (CALIFORNIA AMENDED) (NOTE SEE UL STANDARD 1711 FOR "VISUAL DEVICES")	2016 EDITION
NFPA 253	CRITICAL RADIANT FLUX OF FLOOR COVERING SYSTEMS	2015 EDITION
NFPA 2001	CLEAN AGENT FIRE EXTINGUISHING SYSTEMS REFERENCE CODE SECTION FOR NFPA 5105-CBC (SFM) 3504.1	2015 EDITION

IF CONFLICTS BETWEEN VARIOUS ELEMENTS (ARCHITECTURAL, STRUCTURAL, MECHANICAL, PLUMBING, ELECTRICAL) OF THE WORK OF THE DRAWINGS ARE DISCOVERED, THEY SHALL BE BROUGHT TO THE ATTENTION OF THE ARCHITECT IN ACCORDANCE WITH THE CONDITIONS OF THE CONTRACT.

THE OWNER, THE ARCHITECT AND THE ENGINEERS SHALL ASSUME NO RESPONSIBILITY FOR THE EXISTING CONDITIONS AND MEASUREMENTS INDICATED ON THESE PROPOSED PLANS. THE CONTRACTOR SHALL FIELD VERIFY ALL EXISTING MEASUREMENTS AND CONDITIONS NECESSARY TO PROVIDE COMPLETE WORK AS INDICATED BY THE INTENT OF THESE PLANS PRIOR TO PROCEEDING WITH WORK OF THIS CONTRACT.

EXISTING DIMENSIONS INDICATED ON THESE PROPOSED DRAWINGS HAVE BEEN PROVIDED FROM INFORMATION OBTAINED FROM THE DISTRICT. THE CONTRACTOR SHALL USE WHAT MEANS NECESSARY TO VERIFY THE DIMENSIONS IN THE AREAS OF DESIGNATED WORK. THE CONTRACTOR SHALL REPORT ANY DISCREPANCIES TO THE ARCHITECT PRIOR TO STARTING WORK IN THE AREA OF QUESTION.

CHANGES TO THE APPROVED DRAWINGS AND SPECIFICATIONS SHALL BE MADE BY AN ADDENDA OR A CONSTRUCTION CHANGE DOCUMENT (CCD TYPE-'A') APPROVED BY THE DIVISION OF THE STATE ARCHITECT, AS REQUIRED BY SECTION 4-338, PART 1, TITLE 24, C.C.R.

A "CLASS 3" PROJECT INSPECTOR EMPLOYED BY THE DISTRICT (OWNER) APPROVED AND CERTIFIED BY THE DIVISION OF THE STATE ARCHITECT SHALL PROVIDE CONTINUOUS INSPECTION OF THE WORK. THE DUTIES OF THE INSPECTOR ARE DEFINED IN SECTION 4-342, PART 1, TITLE 24, C.C.R.

GRADING PLANS, DRAINAGE IMPROVEMENTS, ROAD AND ACCESS REQUIREMENTS AND ENVIRONMENTAL HEALTH CONSIDERATIONS SHALL COMPLY WITH ALL LEGAL ORDINANCES.

THE INTENT OF THESE DRAWINGS AND SPECIFICATIONS IS THAT THE WORK OF THE ALTERATIONS, REHABILITATION OR RECONSTRUCTION IS TO BE IN ACCORDANCE WITH TITLE 24, CALIFORNIA CODE OF REGULATIONS. SHOULD ANY EXISTING CONDITION SUCH AS DETERIORATION OR NON-COMPLYING CONSTRUCTION BE DISCOVERED WHICH IS NOT COVERED BY THE CONTRACT DOCUMENTS WHERE THE FINISHED WORK WILL NOT COMPLY WITH TITLE 24, CALIFORNIA CODE OF REGULATIONS, A CCD TYPE-'A', OR A SEPARATE SET OF PLANS & SPECIFICATIONS, DETAILING AND SPECIFYING THE REQUIRED REPAIR WORK SHALL BE SUBMITTED TO AND APPROVED BY DIVISION OF THE STATE ARCHITECT BEFORE PROCEEDING WITH THE REPAIR WORK.

CUTTING, BORING, SAWCUTTING OR DRILLING THROUGH NEW OR EXISTING STRUCTURAL ELEMENTS TO BE DONE ONLY WHEN SO DETAILED IN THE DRAWINGS OR ACCEPTED BY THE ARCHITECT AND ENGINEER WITH THE APPROVAL OF DSA REPRESENTATIVE.

A DSA ACCEPTED TESTING LABORATORY DIRECTLY EMPLOYED BY THE SCHOOL DISTRICT SHALL CONDUCT ALL REQUIRED TESTS AND INSPECTIONS FOR THE PROJECT.

THE FOLLOWING DOCUMENTS SHALL BE ON THE JOBSITE PRIOR TO INSTALLATION OF THE UNIT(S), INCLUDING THE SERIAL NUMBER FOR EACH UNIT.
A. IN-PLANT VERIFIED REPORT
B. LABORATORY VERIFIED REPORT
C. WELDING VERIFIED REPORT

THE SITE INSPECTOR SHALL VERIFY THE ABOVE DOCUMENTS ARE APPLICABLE TO EACH UNIT PRIOR TO INSTALLATION OF THE UNIT(S).

NOTIFY ARCHITECT AND THE DIVISION OF THE STATE ARCHITECT FIELD ENGINEER IF ANY DISCREPANCIES OCCUR.

VICINITY MAP

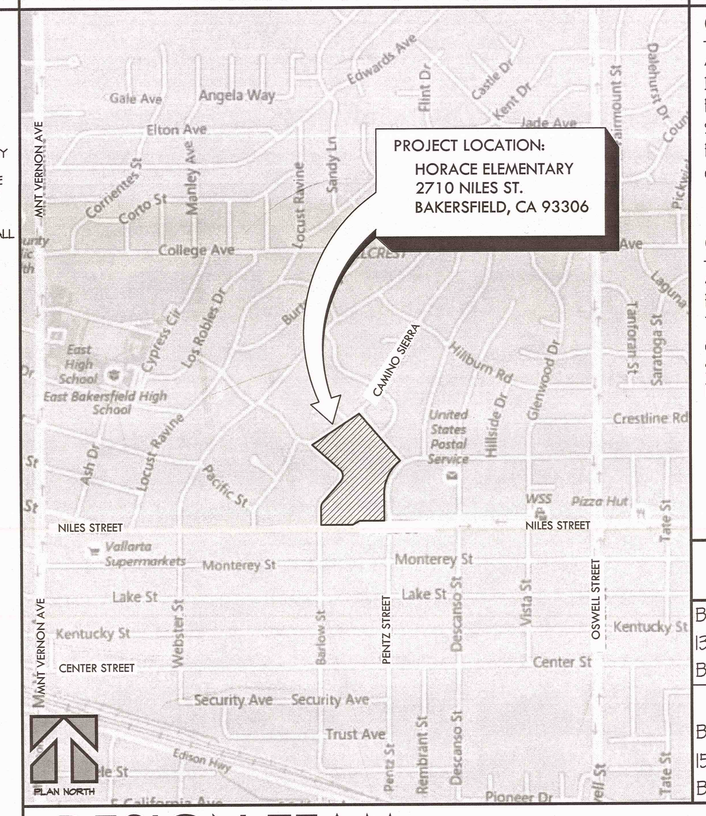

SCOPE OF WORK (CONTRACT-1 BY DISTRICT, CONTRACT-2 BY CONTRACTOR)

CONTRACT I - MODULAR CLASSROOM BLDG.S

ALL LABOR, MATERIALS, & EQUIPMENT TO INSTALL (2) WOOD FOUNDATIONS, DELIVER & SET (2)-MODULAR BUILDINGS WITH PERIMETER SKIRTING, PLATFORMS, RAMPS & RAMP EXTENSIONS AS INDICATED ON THESE PLANS AND SPECIFICATIONS. THE MODULAR BUILDING SHALL BE COMPLETE AND FUNCTIONAL, READY FOR UTILITY HOOK-UPS. COORDINATE WITH THE SITE IMPROVEMENT CONTRACTOR FOR A COMPLETE INSTALLATION, SEE CONTRACT-II

CONTRACT II - SITE IMPROVEMENTS

ALL LABOR, MATERIALS, & EQUIPMENT REQUIRED TO PROVIDE SITE IMPROVEMENTS FOR (2) MODULAR BUILDINGS. WORK TO INCLUDE BUT NOT NECESSARILY LIMITED TO SITE PATH OF TRAVEL, PROVIDE SIGNAGE, FIRE EXTINGUISHERS, AC PAVING, CHAIN-LINK FENCING & GATES, UNDERGROUND CONDUITS & CONNECTING ALL PWR, SIGNAL, FIRE ALARM, GROUNDS & ALL REQUIRED UTILITY SERVICES TO THE MODULAR BUILDINGS FOR A COMPLETE & FUNCTIONAL INSTALLATION.

OWNER

BAKERSFIELD CITY SCHOOL DISTRICT (661) 631-4600
1300 BAKER STREET FAX (661) 326-1485
BAKERSFIELD, CALIFORNIA, 93305 www.bcsd.com

FOR INFO. ON THIS PROJECT, CONTACT ROBERT VANTASSEL, SUPERVISOR OF SCHOOLS PLANNING & CONSTRUCTION

B.C.S.D. MAINTENANCE & OPERATION DEPARTMENT (661) 631-5883
1501 FELIZ DRIVE FAX (661) 834-9986
BAKERSFIELD, CALIFORNIA, 93307 vantasselr@bcsd.k12.ca.us

DESIGN TEAM

ARCHITECTURAL	CIVIL	ELECTRICAL
SCARCHITECT INC.	PORTER AND ASSOCIATES, INC	ROSE-SING & ASSOCIATES
1601 NEW STINE RD., #280	1200 21st STREET SUITE A	131 SOUTH DUNWORTH
BAKERSFIELD, CA 93309	BAKERSFIELD, CA 93309	VISALIA, CA 93292
(661) 397-4377	(661) 327 - 0362	(559) 733-2671
FAX (661) 397-4378	FAX (661) 327 - 1065	FAX (559) 900-4919

ABBREVIATIONS

@	AT
±	And
(E)	Existing
<	Less Than
>	More Than
(N)	New
⊥	Perpy
±	Plus Or Minus
#	Pound / Number
≤	Less than or Equal
≥	More than or Equal
AB	Anchor Bolt
ac	Asphalt Concrete
ACC	Accessibility
AD	Area Drain*
AFF	Above Finish Floor
AP	Access Panel
A/C	Air-conditioning
ABV	Above
ACOUS	Acoustic(al)
ACPL	Acoustical Plaster
ADD	Addendum
ADJ	Adjustable/Adjacent
AGG	Aggregate
AFF	Above Finish Floor
ALT	Alternate
ALUM	Aluminum
ANC	Anchor(age)
ANOD	Anodized
APPROX	Approximate(ly)
ARCH	Architect
ASB	Asbestos
AUTO	Automatic
AVE	Average
AV	Audio Video
BBD	Bulletin Board
BC	Begin Curve
BMK	Bench Mark
BOB	Bottom of Beam
BUR	Built-up Roofing
BD	Board
BEL	Below
BIT	Bituminous
BLDG	Building
BKBD	Backboard
BLK	Block
BLKG	Blocking
BRK	Break, Brick
BRKR	Braker
BM	Beam
BOT	Bottom
BN	Boundary Nailing
BRG	Bearing
BRNZ	Bronze*
BTU	British Thermal Unit
BTWN	Between
BUR	Built Up Roofing
BVL	Bevel(ed)

C&G	Curb and Gutter
CB	Catch Basin
CF	Cubic Foot(Feet)
CFL	Counterflashing
CFRD	Coffered
CG	Corner Guard
CI	Cast Iron
CIP	Cast Iron Pipe
CIPC	Cast-in-place concrete
CISP	Cast Iron Soil Pipe
CJ	Ceiling Joist
CJT	Control Joint
CK	Caulk(ing)
CL	Chain Link
℄	Center Line
CMT	Ceramic Mosaic tile
CMU	Concrete Masonry unit
CO	Clean-out
COTG	Clean-out to grade
COTH	Clean-out thru' wall
CR	Curb Return
CAB	Cabinet
CEM	Cement
CER	Ceramic
CHAM	Chamfer
CHBD	Chalkboard
CHG	Change
CLG	Ceiling
CLR	Clear(ance)
CLS	Closure
CNTR	Counter
COL	Column
COMB	Combination
COMPO	Composition
CONC	Concrete
CONST	Construction
CONT	Continuous
CORR	Corrugated
CSK	Countersink
CPET	Carpet
CSMT	Casement
CTR	Center
CW	Cold Water
DF	Drinking Fountain / Douglas Fir
DG	Decomposed Gravel
DH	Double Hung
DA	Double Acting
DET	Detail
DIA	Diameter
DIAG	Diagonal
DIM	Dimension
DIV	Division
DP	Depress(ed)
DR	Door
DS	Downspout

DISP	Dispenser
DWG	Drawing
DWR	Drawer*
DC IN	Domestic Cold Water
DHW	Domestic Hot Water
E	East
EDF	ElectricDrinkingFountain
EF	Each Face
EJ	Expansion Joint
EPB	Electric Panel Board
EW	Each Way
EA	Each
ELEC	Electric(al)
ELEVR	Elevator
ELEV	Elevation
EMER	Emergency
ENAM	Enamel
ENCL	Enclosure
EQ	Equal
EQUIP	Equipment
EXH	Exhaust
EXP	Expansion/Exposed
EXT	Exterior
FBO	Furnished By Others
FBLKG	Fire-blocking
FD	Floor Drain
FDN	Foundation
FEC	Fire Extinguisher Cabinet
FG	Fixed Glass/Finish Grade
FGRD	Finish Grade
FJ	Floor Joist
FJT	Flush Joint
FO	Face Of
FOC	Face of Concrete/ Column
FOF	Face of Finish
FOM	Face of Masonry
FOS	Face of Stud
FOW	Face of Wall
FAB	Fabrication(tion)
FAC	Factory
FAS	Fasten(er)
FBD	Fiberboard
FBGL	Fiberglass
FHC	Fire Hose Cabinet
FHMS	Flathead Machine Screw
FHWS	Flathead Wood Screw
FHSS	Flathead Stainless steel
FIN	Finish(ed, es)
FLEX	Flex(ible)
FLR	Floor
FLUOR	Fluorescent
FOUND	Foundation
FRMG	Framing

FRT	Fire-Retardant
FS	Floor Sink
FTG	Footing
FURR	Furring(ed)
FUT	Future
FV	Field Verify
GB	Grab Bar
GI	Galvanized Iron
GA	Gauge
GALV	Galvanize
GL	Glass
GLZG	Glazing
GRAVY	Gravel
GRD	Grade
GSKT	Gasket
GYPBD	Gypsum Board
GYPLA	Gypsum Lath
HB	Hose Bibb
HC	Hollow Core
HJT	Head Joint
HM	Hollow Metal
HVAC	Heating, Ventilating& Air-Conditioning
HBD	Hardboard*
HDR	Header
HDWD	Hardwood
HDWR	Hardware
HEX	Hexagonal
HORIZ	Horizontal
HSS	Hollow Steel Section
HT	Height
HTG	Heating
HW	Hot Water
ID	Inside Diameter
INCL	Include(ing)
INSTR	Instruction(tor)
INSUL	Insulate(tion)
INTM	Intermediate
INT	Interior
INV	Invert
ISA	International Symbol of Accessibility
JST	Joist
JT	Joint
OC	On Center
OCBW	On Center Both Ways
OD	Outside Diameter
O/	Over
OA	Overall
OBS	Obscure
OFLD	Overflow Drain
OHMS	Overhead Machine Screw
LBS	Pounds

LBT	Lag Bolt
LF	Linear Foot
LH	Left Hand
LPT	Low Point
LAD'R	Ladder
LAM	Laminate(d)
LAV	Lavatory
LBL	Label
LVR	Louver
LOC	Location
LT	Light
MACH	Machine
MB	Machine Bolt/Marker Board
MC	Medicine Cabinet
MT	Metal Threshold
MAS	Masonry
MAT	Material
MEMBRN	Membrain
MECH	Mechanical
MED	Medium
MFRS	Manufacturing
MFR	Manufacturer*
MH	Man Hole
MIN	Minimum
MIR	Mirror
MISC	Miscellaneous
MLDG	Molding (Moulding)
MKR	Marker*
MO	Masonry Opening
MOD	Modular
MS	Mud-Set
MT	Metal Threshold
MTD	Mounted
MTL	Metal
MTL'L	Material
MULL	Mullion
MWK	Millwork
N	North
NIC	Not In Contract
NO	Number
NTS	Not to Scale
NAT	Natural
NOM	Nominal
NRC	Noise Reduction Coefficient
O	On Center
OH	Overhead
OPNG	Opening
OPP	Opposite
PA	Planting Area
PS&P	Patch, Sand & Paint
PS&S	Patch, Sand, Stain & Seal
PBD	Particle Board
P	Property Line
PLAM	Plastic Laminate(d)
POC	Point of Connection
POI	Point of Intersection
PT DISP	Paper Towel Dispenser
PT RECP	Paper Towel Receptical
PVC	Poly-Vinyl Chloride
PART	Partition
PC CONC	Precast Concrete
PERF	Perforated
PERIM	Perimeter
PL	Plate
PLAS	Plaster
(P)CPL	(Portland) Cement Plaster
PNL	Panel
PNT(D)	Paint(ed)
PREFAB	Prefabricated
PLBG	Plumbing
PLYWD	Plywood
PTDF	Pressure Treated D.F.
R	Riser
RA	Return Air
RD	Roof Drain, Relative Density
RH	Right Hand
RJ	Roof Joist
RL	Ridge Line
RO	Rough Opening
RAD	Radius
ROW	Right of Way
RDWD	Redwood
REF	Reference
REINF	Reinforce(ment)
REM	Removal
REQ'D	Required
RES	Resilient
RET	Return
REV	Revision
RFG	Roofing
REFL	Reflect(ed),(ive)or(r)
RM	Room
RO	Rough Opening
RS	Radiator Strip
RTSB	Rubber Top Set Base
RVT	Rivet
RWD	Redwood

RWL	Rainwater Leader
SHP	Shelf and Pole
S	South
SC	Solid Core
SD	Storm Drain
SEL	Select
SF	Square Foot
SN DISP	Sanitary Napkin Dispenser
SCHED	Schedule
SEC	Section
SGL	Single
SHLF	Shelf
SHLVG	Shelving
SHWR	Shower
SHT	Sheet
SHT MTL	Sheet Metal
SHTG	Sheathing
SIM	Similar
SKLT	Skylight
SPEC	Specification(s)
SPKR	Speaker
SQ	Square
SS	Stainless Steel
STC	Sound Transmission Coefficient
ST	Self Tapping
STD	Standard
STFRNT	Storefront
STL	Steel
STOR	Storage
STRUC	Structure
STRUCTL	Structural
SUSP	Suspended
SYM	Symetrical
SYS	System
T&B	Top & Bottom
T&G	Tongue & Groove
T	Tread
TB	Towel Bar
THRU	Through
TI	Tenant Improvement
TJ	Tool Joint
TS	Tube Steel
TOB	Top of Beam
TOC	Top of Curb(Conc)
TOM	Top of Masonry
TOP	Top of Plate(Parapet)
TOR	Top of Roof
TORD	Top of Roof Drain
TOS	Top of Sheathing
TOW	Top of Wall
TP DISP	Toilet Paper Dispenser
T PART	Toilet Partition
TSC DEP	Toilet Seat Cover Dispenser
TELE	Telephone
TEMP	Tempered

TEXT	Texture(d)
TH	Threshold
THD	Thread(ed, s)
THK	Thickness
TKBD	Tackboard
TSB	Topset Base
TS	Thermostat
TT&P	Tape, Texture & Paint
TYP	Typical
TV	Television
TW	Tread Width
UNO	Unless Noted Otherwise
UG	Underground
VAC	Vacuum
VERT	Vertical
VIF	Verify In Field
VG	Vertical Grain
VO	Vent Over(Offset)
VR	Vent Riser
VTR	Vent Thru Roof
VARN	Varnish
VCT	Vinyl Composition Tile
VCTWB	Vinyl Composition Tackable Wallboard
VEN	Veneer
VERT	Vertical
VPB	Vapor Barrier
VWC	Vinyl Wall Covering
W	West
WC	Watercloset
WD	Wood
WG	Wire Glass
WH	Water Heater
WHCAB	Wall Hung Cabinet
WI	Wrought Iron
WM	Wire Mesh
WTW	Wall to Wall
WWM	Welded Wire Mesh
WWRM	Welded Wire Reinforcing Mat
W/	With
WHV	Where
W/O	Within
WO	Without
WOLM	Waimanized
WDW	Window
WP	Waterproof(ing)
WR	Water Resistant
WS	Weatherstrip
WSC	Wainscot
WST	Waste
WT	Weight

SHEET INDEX

SITE IMPROVEMENTS FOR (2)-24'x40' MODULAR CLASSROOMS AT HORACE MANN ELEMENTARY SCHOOL
2710 NILES ST, BAKERSFIELD, CA 93306
FOR
BAKERSFIELD CITY SCHOOL DISTRICT
BAKERSFIELD, KERN COUNTY, CALIFORNIA

IDENTIFICATION STAMP
DIV. OF THE STATE ARCHITECT
OFFICE OF REGULATION SERVICES
APPL: 03-118412
FILE: 15-6
AC FLS SS
DATE: SEP 06 2017
PTN : 63321-285

SCARCHITECT INC.
1601 NEW STINE ROAD, SUITE 280
BAKERSFIELD, CA 93309
PH: (661) 397-4377
FAX: (661) 397-4378
WWW.SCARCHITECT.COM

JOB NO.	1244
DRAWN :	S.M.W
CHECKED :	S.J.C.
DATE :	06/06/17

T

0.0
1 OF 3 SHEETS

TITLE SHEET / VICINITY MAP/ SCOPE OF WORK / GENERAL NOTES / SHEET INDEX / ABBREVIATIONS

LEGEND

- EX. TREE (SIZE VARIES)
- 100.00 — DESIGN GRADE
- 2.0% — DESIGN SLOPE
- + 102.41 AC — EXISTING GRADE
- 514.0 — EX. GROUND CONTOUR
- ± — MATCH EXISTING ELEVATION
- EX. BLOCK WALL
- —X—X—X— EX. CHAIN-LINK FENCE
- PROPOSED ACCESSIBLE PATH OF TRAVEL
- EX. EDGE OF PAVING
- © EX. CLEAN-OUT LID
- Ⓢ OR SEW — EX. SEWER LID
- Ⓦ OR WTR — EX. WATER LID
- Ⓔ OR ⊠ — EX. ELECTRICAL LID

GRADING CONSTRUCTION NOTES

1. EXISTING ASPHALT TO REMAIN, PROTECT IN PLACE.
2. MATCH EXISTING.
3. CONSTRUCT RAMP PER BUILDING MANUFACTURER.
4. INSTALL GALVANIZED FLASHING PER DETAIL A/C1.
5. CONTRACTOR SHALL COORDINATE REMOVAL OR RELOCATION OF ALL EXISTING EQUIPMENT AND UTILITIES WITHIN LIMITS OF CONSTRUCTION WITH DISTRICT PRIOR TO CONSTRUCTION.

GRIND 0.1' MINIMUM EXISTING AC AND OVERLAY TO DESIGN GRADES SHOWN.

NOTES:

1. CONTRACTOR SHALL COORDINATE REMOVAL OR RELOCATION OF ALL EXISTING EQUIPMENT AND UTILITIES WITHIN LIMITS OF CONSTRUCTION WITH DISTRICT PRIOR TO CONSTRUCTION.
2. SEE ARCHITECT'S PLANS FOR ALL DIMENSIONS NOT SHOWN.

BENCHMARK USED

TOP OF CONCRETE MONUMENT IN LAMPHOLE MARKING CENTERLINE BEGINNING OF CURVE ON CATALPA WAY LYING APPROXIMATELY 160 FEET NORTHERLY OF THE CENTERLINE OF NILES STREET.
ELEVATION = 500.00 FEET (ASSUMED DATUM)

A/C1 GALVANIZED FLASHING DETAIL
NTS

B/C2 ACCESSIBLE PATH DETAIL
NTS

ASPHALT CONCRETE NOTES

1. THIS SECTION COVERS THE FURNISHING OF LABOR AND EQUIPMENT FOR EXCAVATION, TRENCHING, BACKFILLING AND ALL OTHER EARTHWORK OPERATIONS REQUIRED TO COMPLETE THE INSTALLATION OF ASPHALT PAVING AS INDICATED ON THE DRAWINGS AND HEREIN SPECIFIED. ALL REFERENCES TO PROVISIONS SHALL BE TO THE CALTRANS STANDARD SPECIFICATIONS, CURRENT EDITION, UNLESS OTHERWISE NOTED.
2. AGGREGATE BASE SHALL BE "CLASS 2" UNLESS OTHERWISE NOTED AND SHALL CONFORM TO THE PROVISIONS IN SECTION 26, "AGGREGATE BASES," OF THE CALTRANS STANDARD SPECIFICATIONS. AGGREGATE BASE SHALL BE COMPACTED TO A MINIMUM OF 95% OF MAXIMUM DRY DENSITY.
3. ASPHALT CONCRETE SHALL BE "TYPE B" UNLESS OTHERWISE NOTED AND SHALL CONFORM TO THE PROVISIONS IN SECTION 39, "ASPHALT CONCRETE," OF THE CALTRANS STANDARD SPECIFICATIONS AND THE FOLLOWING SPECIAL PROVISIONS:
   - A. ASPHALT CONCRETE SHALL HAVE A BITUMINOUS BINDER. THE BINDER SHALL BE PG 64-10 PERFORMANCE GRADED ASPHALT AND SHALL CONFORM TO THE REQUIREMENTS OF THE TABLE FOR PERFORMANCE GRADED ASPHALT BINDER IN SECTION 92-1.02(B), "GRADES" OF THE STANDARD SPECIFICATIONS.
   - B. THE AMOUNT OF BITUMINOUS BINDER TO BE MIXED WITH THE MINERAL AGGREGATE SHALL BE BETWEEN FOUR PERCENT (4%) AND SIX PERCENT (6%) BY WEIGHT OF DRY MINERAL AGGREGATE. THE EXACT AMOUNT OF BITUMINOUS BINDER TO BE MIXED WITH THE MINERAL AGGREGATE WILL BE DETERMINED BY THE ENGINEER.
   - C. ASPHALT CONCRETE SURFACING SHALL BE CONSTRUCTED IN ACCORDANCE WITH REQUIREMENTS OF SECTION 39. A PRIME COAT SHALL NOT BE APPLIED TO THE BASE PRIOR TO PLACING ASPHALT CONCRETE SURFACING. A TACK COAT SHALL BE APPLIED PRIOR TO PAVING OVER EXISTING ASPHALT CONCRETE SURFACING. TACK COAT SHALL CONFORM TO CALTRANS STANDARD SPECIFICATION SECTION 94; ASPHALT GRADE EMULSION SS-1, SS-1H, CSS-1 AND CSS-1H.
   - D. ASPHALT CONCRETE SHALL BE COMPACTED TO 92-94% OF THE MAXIMUM THEORETICAL DENSITY AS DETERMINED BY ASTM D-2041. IN-PLACE DENSITY SHALL BE DETERMINED IN ACCORDANCE WITH CALIFORNIA TEST 375.
   - E. AT CONNECTIONS TO EXISTING AC SURFACES, THE EXISTING SURFACE SHALL BE SAWCUT AND REMOVED TO A NEAT LINE BEFORE THE PAVING OR AS DIRECTED BY THE ENGINEER.
   - F. THE MIXTURE SHALL BE APPLIED AT A MINIMUM TEMPERATURE OF 225°F. SPREADING SHALL BE PERFORMED BY SELF-PROPELLED ASPHALT PAVERS THAT PRODUCE AN ASPHALT CONCRETE SURFACING OF UNIFORM SMOOTHNESS AND TEXTURE.
   - G. ALL SPILLAGE OF ASPHALT CONCRETE OUTSIDE OF THE DESIGNATED PAVING AREA SHALL BE PROMPTLY SWEPT UP AND REMOVED.
   - H. FOG SEAL SHALL BE APPLIED TO ALL NEWLY PAVED SURFACES WITHIN TWO WEEKS AFTER THE PAVING IS PLACED. FOG SEAL SHALL BE APPLIED IN ACCORDANCE WITH SECTION 37-1; GRADE MEDIUM FINE; ASPHALTIC EMULSION GRADE SS-1.
   - I. FINISHING ROADWAY SHALL CONFORM TO THE PROVISIONS OF SECTION 22.
   - J. ALL ASPHALT CONCRETE SHALL BE CONSTRUCTED TO THE TOLERANCES ALLOWED IN SECTION 39-6.03 AS MODIFIED BY THESE PLANS. A.C. AND BASE THICKNESS SHOWN ON THESE PLANS ARE MINIMUMS AND LESSER THICKNESS WILL NOT BE ALLOWED.
4. A TINTED PRE-EMERGENT HERBICIDE SHALL BE APPLIED OVER NATURAL GROUND IN ALL AC PAVED PARKING LOT AREAS AND DRIVE AISLES PRIOR TO PLACING ANY BASE OR PAVING. APPLY IN STRICT ACCORDANCE WITH MANUFACTURER'S INSTRUCTIONS. NO WEED CONTROL CHEMICAL IS TO BE APPLIED TO AREAS DESIGNATED FOR PLANTING.

-N-
NORTH
SCALE: 1"=5'
0 2.5 5 10

SEE SHEET No. C2

J:\28820\Improvements\28820-CI_C3D.dwg 08/28/17 matt

MARK	DATE	REVISIONS
1		
2		
3		

CHECK AND VERIFY ALL DIMENSIONS BEFORE PROCEEDING WITH THE WORK. REPORT DISCREPANCIES TO THE ARCHITECT. ALL CONSTRUCTION SHALL CONFORM TO THE C.B.C.

SITE IMPROVEMENTS FOR (2)-24'x40' MODULAR CLASSROOMS AT HORACE MANN ELEMENTARY SCHOOL

2710 NILES ST, BAKERSFIELD, CA 93306
FOR
BAKERSFIELD CITY SCHOOL DISTRICT
BAKERSFIELD, KERN COUNTY, CALIFORNIA

IDENTIFICATION STAMP
DIV. OF THE STATE ARCHITECT
OFFICE OF REGULATION SERVICES
APP#: 09-112412
FILE: 15-6
AC ✓ FLS ✓ SS TB
DATE: SEP 06 2017
PTN : 63321-285

SCARCHITECT inc.
1601 NEW STINE ROAD, SUITE 280
BAKERSFIELD, CA 93309
PH: (661) 397-4377
FAX: (661) 397-4378
WWW.SCARCHITECT.COM

LICENSED ARCHITECT STEPHEN J. CORWIN C-16788 Exp. 11/30/17 STATE OF CALIFORNIA
STEPHEN J. CORWIN, NCARB, AIA, LEED®-AP BD+C

REGISTERED PROFESSIONAL ENGINEER FRED W. PORTER II RCE 74059 CIVIL STATE OF CALIFORNIA 8/28/17
PORTER & ASSOCIATES, INC.
ENGINEERING & SURVEYING
1200 21st Street, Bakersfield, California 93301
661.327.0362 FAX 661.327.1065

CIVIL IMPROVEMENTS R-14 & R-15 CLASSROOMS, ADA PATH OF TRAVEL

JOB NO.	1244
DRAWN :	
CHECKED :	
DATE :	08/30/2017

C1
OF 2 SHEETS

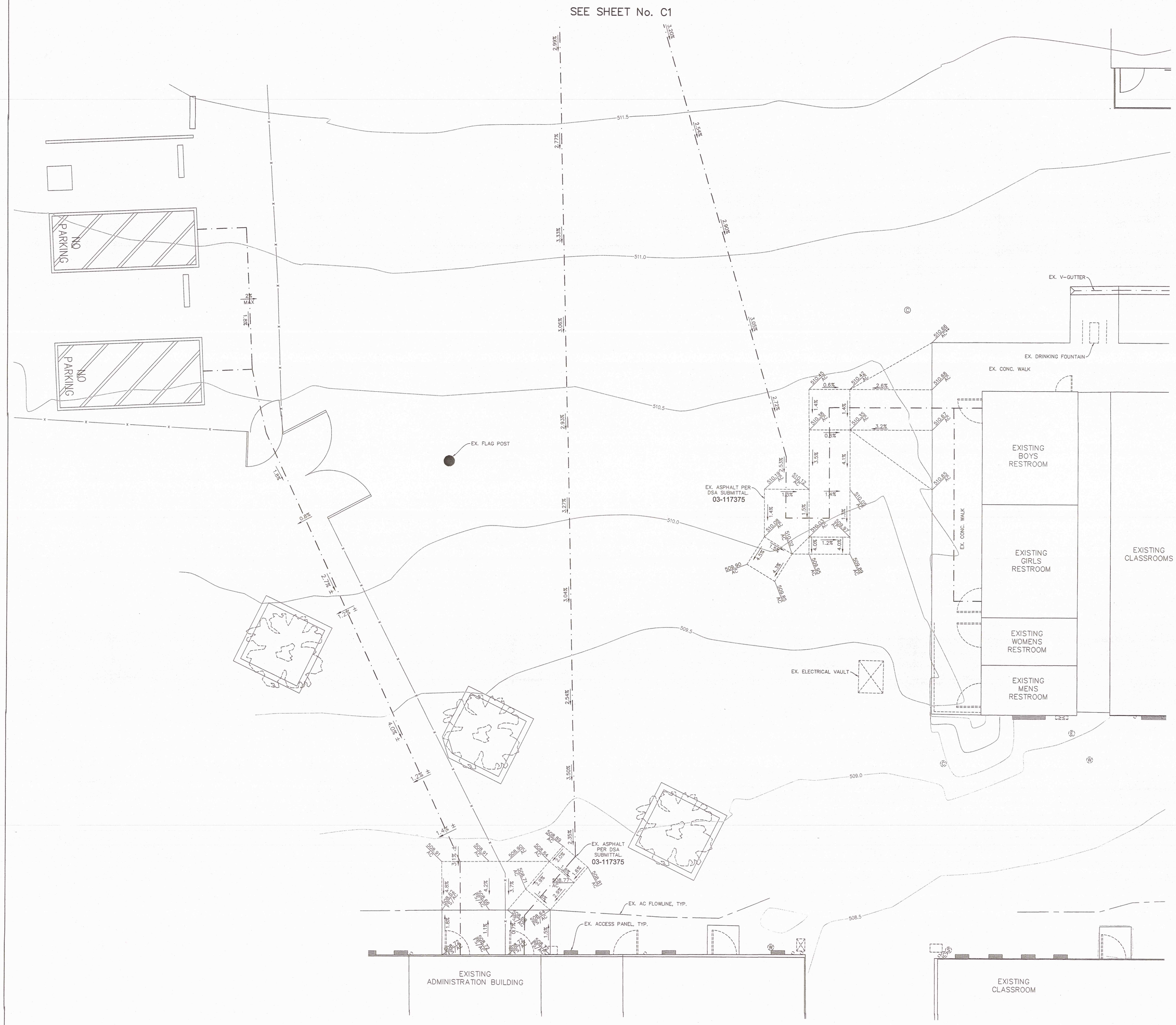

LEGEND

- EX. TREE (SIZE VARIES)
- DESIGN GRADE
- DESIGN SLOPE
- EXISTING GRADE
- EX. GROUND CONTOUR
- MATCH EXISTING ELEVATION
- EX. BLOCK WALL
- EX. CHAIN-LINK FENCE
- PROPOSED ACCESSIBLE PATH OF TRAVEL
- EX. EDGE OF PAVING
- EX. CLEAN-OUT LID
- EX. SEWER LID
- EX. WATER LID
- EX. ELECTRICAL LID

GENERAL NOTES

1. ALL CONSTRUCTION SHALL CONFORM TO THIS PLAN, THE CALIFORNIA BUILDING CODE, AND STANDARDS PERTAINING THERETO. THESE DOCUMENTS SHALL BE MADE A PART HEREOF.
2. THE CONTRACTOR IS RESPONSIBLE FOR VERIFYING DIMENSIONS, DATA AND MEASUREMENTS AT THE BUILDING SITE PRIOR TO CONSTRUCTION. DO NOT SCALE DRAWINGS. WRITTEN DIMENSIONS ON THESE DRAWINGS SHALL HAVE PRECEDENCE OVER SCALED DIMENSIONS. PORTER & ASSOCIATES, INC. MUST BE NOTIFIED OF ANY VARIATIONS FROM THE DIMENSIONS AND CONDITIONS SHOWN BY THESE DRAWINGS.
3. EXISTING UTILITY AND UNDERGROUND LINES HAVE BEEN SHOWN ON THIS PLAN ACCORDING TO AVAILABLE RECORDS. THE ENGINEER IS NOT RESPONSIBLE FOR POSSIBLE ERRORS OR OMISSIONS. THE CONTRACTOR IS RESPONSIBLE FOR VERIFICATION OF THE LOCATION AND DEPTH OF ALL UTILITIES PRIOR TO BEGINNING OF ANY WORK. UNDERGROUND SERVICE ALERT (U.S.A.: 1-800-227-2600) SHALL BE CONTACTED AT LEAST TWO WORKING DAYS PRIOR TO ANY CONSTRUCTION OR EXCAVATION.
4. ANY EXISTING IMPROVEMENTS OR UTILITIES THAT ARE REMOVED, DAMAGED OR UNDERCUT BY CONTRACTOR'S OPERATIONS SHALL BE REPAIRED OR REPLACED AT THE CONTRACTOR'S EXPENSE, AS DIRECTED BY THE ENGINEER AND APPROVED BY THE GOVERNING AUTHORITY.
5. IF A PROBLEM OR CONFLICT SHOULD ARISE DURING THE COURSE OF THE PROJECT, IT IS THE RESPONSIBILITY OF THE OWNER OR THE CONTRACTOR TO NOTIFY THE ENGINEER IMMEDIATELY PRIOR TO ANY FURTHER WORK.
6. THE CONTRACTOR SHALL FURNISH ALL LABOR, MATERIALS, TOOLS, EQUIPMENT AND SUPERVISION NECESSARY FOR A COMPLETE AND FUNCTIONAL PRODUCT.
7. ALL WORK WHICH IS DEFECTIVE IN ITS CONSTRUCTION OR DEFICIENT IN ANY OF THE REQUIREMENTS OF THESE DRAWINGS AND SPECIFICATIONS SHALL BE REMEDIED, OR REMOVED AND REPLACED BY THE CONTRACTOR IN AN ACCEPTABLE MANNER, AND NO COMPENSATION WILL BE ALLOWED FOR SUCH CORRECTION.
8. IN THE EVENT CONSTRUCTION STAKING BASED ON THE CONSULTANT'S PLANS, DRAWINGS OR OTHER DOCUMENTS IS ACCOMPLISHED BY ANYONE OTHER THAN THE CONSULTANT, THE OWNER OR CONTRACTOR SHALL NOTIFY THE BUILDING OFFICIAL IN WRITING AS TO THE CHANGE OF ENGINEER IN RESPONSIBLE CHARGE.
9. THE CONTRACTOR AGREES THAT HE SHALL ASSUME SOLE AND COMPLETE RESPONSIBILITY FOR JOB SITE CONDITIONS DURING THE COURSE OF CONSTRUCTION OF THIS PROJECT; INCLUDING EROSION, SEDIMENTATION & DUST CONTROL PLAN AND STORM WATER POLLUTION PREVENTION PLAN IMPLEMENTATION AND THE SAFETY OF ALL PERSONS AND PROPERTY; THAT THIS REQUIREMENT SHALL APPLY CONTINUOUSLY AND NOT BE LIMITED TO NORMAL WORKING HOURS; AND THAT THE CONTRACTOR SHALL DEFEND, INDEMNIFY AND HOLD THE OWNER AND THE ENGINEER HARMLESS FROM ANY AND ALL LIABILITY, REAL OR ALLEGED, IN CONNECTION WITH THE PERFORMANCE OF WORK ON THIS PROJECT, EXCEPTING FOR LIABILITY ARISING FROM THE SOLE NEGLIGENCE OF THE OWNER OR THE ENGINEER.
10. IF THE CONTRACTOR IS IN DOUBT AS TO THE MEANING OF ANY PART OF THE DRAWINGS AND SPECIFICATIONS OR FINDS DISCREPANCIES IN OR OMISSIONS FROM THE DRAWINGS, HE SHALL SUBMIT A WRITTEN REQUEST FOR AN INTERPRETATION OR A CORRECTION THEREOF, PRIOR TO FILING HIS BID PRICE FOR THE PROJECT.
11. PORTER & ASSOCIATES, INC. WILL NOT BE RESPONSIBLE OR LIABLE FOR UNAUTHORIZED CHANGES TO OR USES OF THESE PLANS. ANY AND ALL CHANGES TO THESE PLANS MUST BE APPROVED IN WRITING BY PORTER & ASSOCIATES, INC.

ACCESSIBILITY NOTES

1. ACCESSIBILITY NOTES ARE PROVIDED FOR REFERENCE ONLY. ALL WORK SHALL BE PERFORMED IN ACCORDANCE WITH APPLICABLE SECTIONS OF THE CALIFORNIA BUILDING CODE AND ADA STANDARDS. THE CONTRACTOR SHALL OBTAIN THE LATEST EDITION THEREOF.
2. CURB RAMPS SHALL BE 8.33% MAXIMUM GRADE.
3. PERPENDICULAR CURB RAMP SIDE SLOPES SHALL NOT EXCEED 10% GRADIENT.
4. SURFACE SLOPE OF RAMPS SHALL NOT EXCEED 8.33%.
5. ACCESSIBLE ROUTE SLOPES SHALL NOT EXCEED 5%, UNLESS CONSTRUCTED AS A RAMP AND HANDRAILS ARE PROVIDED.
6. ACCESSIBLE ROUTE CROSS SLOPES SHALL NOT EXCEED 2%.
7. RAMP LANDINGS SHALL NOT EXCEED 2% MAXIMUM GRADE IN ANY DIRECTIONS.
8. GRATINGS LOCATED WITHIN ACCESSIBLE ROUTES SHALL HAVE MAXIMUM 1/2" OPENINGS IN THE DIRECTION OF PEDESTRIAN TRAVEL.
9. TRANSITIONS ALONG ACCESSIBLE ROUTES SHALL BE FLUSH WITH CHANGES IN LEVEL NO GREATER THAN ¼". CHANGES IN LEVEL BETWEEN ¼" AND ½" SHALL BE BEVELED WITH A MINIMUM GRADIENT OF 1:2. CHANGES IN LEVEL BETWEEN 0" AND ¼" MAY BE VERTICAL.
10. EXCEPT BETWEEN SIDEWALKS AND ADJACENT STREETS OR DRIVEWAYS, ABRUPT CHANGES IN LEVEL EXCEEDING 4" ALONG A PATH OF TRAVEL SHALL BE PROTECTED BY A WARNING CURB A MINIMUM OF 6" IN HEIGHT ABOVE THE WALKWAY SURFACE. A WARNING CURB IS NOT REQUIRED WHEN A GUARD OR HANDRAIL IS PROVIDED WITH A GUIDE RAIL CENTERED 2" MINIMUM AND 4" MAXIMUM ABOVE THE WALKWAY SURFACE.
11. ALL ACCESSIBLE DOORS SHALL HAVE LEVEL LANDINGS IN ACCORDANCE WITH CALIFORNIA BUILDING CODE, CURRENT EDITION.
12. ACCESSIBLE PARKING STALLS AND LOADING AISLES SHALL NOT EXCEED 2% MAXIMUM GRADE IN ANY DIRECTION.

-N-
NORTH
SCALE: 1"=5'
0 2.5 5 10

MARK	DATE	REVISIONS
1		
2		
3		

CHECK AND VERIFY ALL DIMENSIONS BEFORE PROCEEDING WITH THE WORK. REPORT DISCREPANCIES TO THE ARCHITECT. ALL CONSTRUCTION SHALL CONFORM TO THE C.B.C.

SITE IMPROVEMENTS FOR (2)-24'x40' MODULAR CLASSROOMS AT HORACE MANN ELEMENTARY SCHOOL

2710 NILES ST, BAKERSFIELD, CA 93306

FOR

BAKERSFIELD CITY SCHOOL DISTRICT

BAKERSFIELD, KERN COUNTY, CALIFORNIA

IDENTIFICATION STAMP
DIV. OF THE STATE ARCHITECT
OFFICE OF REGULATION SERVICES
APPL: 03-118412
FILE: 15-6
AC ___ PLS ___ SS ___
DATE: SEP 06 2017
PTN: 63321-285

SCARCHITECT INC
1601 NEW STINE ROAD, SUITE 280
BAKERSFIELD, CA 93309
PH: (661) 397-4377
FAX: (661) 397-4378
WWW.SCARCHITECT.COM

LICENSED ARCHITECT STEPHEN J. CORBIN No. C-16785 REN. 12/31/17 STATE OF CALIFORNIA

STEPHEN J. CORBIN, NCARB, MA, LEED AP BD+C

REGISTERED PROFESSIONAL ENGINEER JAMES W. PORTER III RCE 74059 CIVIL STATE OF CALIFORNIA 8/28/17

PORTER & ASSOCIATES, INC.
ENGINEERING & SURVEYING
1200 21st Street, Bakersfield, California 93301
661.327.0362 FAX 661.327.1065

CIVIL IMPROVEMENTS ADA PATH OF TRAVEL

JOB NO.	1244
DRAWN :	
CHECKED :	
DATE :	08/30/2017

C2
OF 6 SHEETS

\\Shared\Projects\1244 BCSD Improvements\1244 Improvements\1244C3D.dwg 09/28/17 mott

HORACE MANN DIRECTORY

BLDG. #	BUILDING DESCRIPTION	DSA A#	CLOSED W/ CERT	SQFTG	
(E) M-1	MULTI PURPOSE / CAFETERIA / TOILETS / STORAGE / ADMIN	1100 / 11363 / 51552			
(E) M-2	4 CLSRMS / LIBRARY / STORAGE	3234 / 11363 / 51552			
(E) M-3	4 CLASSROOMS / KINDERGARTEN / MISC TOILETS / ADMIN / STORAGE	10477 / 51552			
(E) A	2 KINDERGARTEN / TOILETS / STORAGE	41306			
(E) B	3 CLASSROOMS / TOILETS	11363 / 51552			
(E) C	2 CLASSROOMS / STORAGE	11363 / 51552			
(E) D	3 CLASSROOMS / STORAGE	11363 / 51552			
(E) E	3 CLASSROOMS	11363 / 51552			
(E) F	TOILETS	41306			
(E) G	6 RELO CLSRMS / TOILET / SPECIAL EDUCATION	10492 / 4806 / 3016	#1 CERT 05/30/00		
(E) R-1	ADMIN / TOILETS / MISC.	17766 / 43481			
(E) R-2	2 CLASSROOMS	17766	#1 CERT 04/21/2005		
(E) R-3	2 KINDERGARTENS	NON-CONFORMING			
(E) R-4	SPECIAL EDUCATION	30116			
(E) B-1	CLASSROOM	03-106605			
(E) B-2	CLASSROOM	03-106605			
(E) B-5	CLASSROOM	03-106605	#1 CERT 04/21/2005		
(E) B-6	CLASSROOM	03-106605			
(E) B-7	CLASSROOM	03-106605			
(E) B-8	TOILETS	03-106605			
GROUP "A" R8	CLASSROOM	03-116978	#1 CERT 08/14/17	960	7,680 SF
R9	CLASSROOM	03-116978		960	
R10	CLASSROOM	03-116978		960	
R11	CLASSROOM	03-116978		960	
R12	CLASSROOM	03-117375	#1 CERT 04/21/2017	960	
R13	CLASSROOM	03-117375		960	
R14*	CLASSROOM	THIS APPLICATION		960	
R15*	CLASSROOM	THIS APPLICATION		960	

DSA 810

LOCAL FIRE AUTHORITY REVIEW

To facilitate the Division of the State Architect's (DSA) approval of the Fire/Life Safety portion of a project, DSA requires Local Fire Authority (LFA) review of certain elements as identified in this form. Use of this form is mandatory for projects that add square footage to a campus or if any item on this form is relevant to the project. For additional information, see DSA 810 Instructions and DSA Policy 09-01.

PROJECT INFORMATION

School District/Owner: Bakersfield City School District

Project Name/School: Horace Mann Elementary

Project Address: 2301 Park Drive

LOCAL FIRE AUTHORITY (LFA)

LFA Agency Name: Kern County Fire Department

LFA Reviewer Name: Jim Killam — Title: FPS-2

Email: jkillam@co.kern.ca.us — Telephone Number: 661-391-7080

I have reviewed and responded to the applicable items for this project as listed below.

Note: Only sign this form when it is imaged onto the site plan. A loose form is not acceptable to DSA.

LFA Reviewer's Signature: _____ Date: 7/18/17

Review Key: "Y" = Complies with LFA requirements; "N" = Not approved (complete Section 8); "NA" = Not applicable to the project; "NR" = LFA elects not to review

	Description	Y	N	NA	NR
1	Where an elevator does not meet medical emergency service cab size, per the California Building Code (CBC), use of stairways for emergency rescue and patient transport is acceptable.			X	
2	Access roads, fire lane markings, pavers and gate entrances are in accordance with Title 19, California Code of Regulations and the California Fire Code, Chapter 5.	X			
3	Fire hydrant location and distribution complies with the California Fire Code (or see # 4).	X			
4	Fire hydrant location and distribution complies with NFPA 1142, "Alternate Means." If "NR" is checked, DSA can only approve on-site water storage as an alternate. The signature of the school district official is required to acknowledge the use of alternate means. Signature of School District Official: _____ Date: _____ Print the School District Official's Name: _____			X	
5	The location(s) of the proposed post indicator valve and fire department connection meet the requirements of this jurisdiction.			X	
6	The location(s) of the detector check valve assembly meet the requirements of this jurisdiction.			X	
7	Is the project located in a hazard severity zone area? (CBC, Chapter 7A, Section 701A.) ☐ Yes ☒ No. Check type if "Yes": ☐ Moderate ☐ High ☐ Very High ☐ WIFA (If one of these boxes is checked, the project design must meet the requirements of Chapter 7A.)				
8	COMMENTS (note deficiencies): #2508 HYDRANT FLOW TESTED 6-02-17 , 1360 CATALPA WAY, 2037 GPM @ 20 PSI				

DSA 810 (rev 05-12-14) — DIVISION OF THE STATE ARCHITECT — DEPARTMENT OF GENERAL SERVICES — Page 1 of 1 — STATE OF CALIFORNIA

SITE GENERAL NOTES

1. THE PATH OF TRAVEL IDENTIFIED IN THESE CONSTRUCTION DOCUMENTS IS COMPLIANT WITH THE CURRENT APPLICABLE CALIFORNIA BUILDING CODE ACCESSIBILITY PROVISIONS FOR PATH OF TRAVEL REQUIREMENTS FOR ADDITIONS. AS PART OF THE DESIGN OF THIS PROJECT, THE P.O.T. WAS EXAMINED AND ANY ELEMENTS, COMPONENTS OR PORTIONS OF THE P.O.T. THAT WERE DETERMINED TO BE NON-COMPLIANT 1) HAVE BEEN IDENTIFIED & 2) THE CORRECTIVE WORK NECESSARY TO BRING THEM INTO COMPLIANCE HAS BEEN INCLUDED WITHIN THE SCOPE OF THIS PROJECTS WORK THROUGH DETAILS, DRAWINGS & SPECIFICATIONS INCORPORATED INTO THESE CONSTRUCTION DOCUMENTS. ANY NONCOMPLIANT ELEMENTS, COMPONENTS OR PORTIONS OF THE P.O.T. THAT WILL NOT BE CORRECTED BY THIS PROJECT BASED ON VALUATION THRESHOLD LIMITATIONS OR A FINDING OF UNREASONABLE HARDSHIP ARE SO INDICATED IN THESE CONSTRUCTION DOCUMENTS. DURING CONSTRUCTION, IF P.O.T. ITEMS WITHIN THE SCOPE OF THE PROJECT REPRESENTED AS CODE COMPLIANT ARE FOUND TO BE NONCONFORMING BEYOND REASONABLE CONSTRUCTION TOLERANCES THEY SHALL BE BROUGHT INTO COMPLIANCE WITH THE CBC AS PART OF THIS PROJECT BY MEANS OF A "CONSTRUCTION CHANGE DOCUMENT."
2. SAW CUT A.C. AND TRENCH AND PROVIDE U.S. UTILITIES PER PLUMBING, FIRE ALARM & ELECTRICAL DWG.S. ALL TRENCH PATCHING SHALL BE FLUSH WITH ADJACENT PAVING. ALL ELEC. CONDUITS SHALL BE 24" MIN. BELOW PAVING SURFACE. SET ON 6" SAND-FILL, W/ 6" SAND COVER, THEN BACKFILLED & COMPACTED TO 95% @ O.M.C., SEE SPECIFICATIONS.
3. THESE MODULAR BLDG.S ARE NOT FIRE SPRINKLERED & THEY HAVE FIRE ALARMS WITH VOICE EVAC.

FEMA F.I.R.M. INFORMATION

FLOOD ZONE DESIGNATION ..... ZONE-X
FLOOD INSURANCE RATE MAP PANEL 06029C 1845E
EFFECTIVE DATE OF F.I.R.M. 09-26-08
APPLICABLE COMMUNITY ORDINANCE ..... KERN CO. ORD. TITLE - 17.48 "FLOODPLAIN MANAGEMENT"

PARKING CALC

PER CBC 2016 11B-208.2, TABLE 11B-208.2

(E) ACCESSIBLE STALLS	4
(E) VAN ACCESSIBLE STALLS	2
(E) REGULAR STALLS	+ 63
TOTAL	69

SAFE DISPERSAL CALC.

PER CBC 2016 482.1.3 & 1004.6.3

GROUP - 'A', SEE EXIT ANALYSIS
(2) ACCESSIBLE SPACES = 105F x 2 = 205F
960 SF x 8 = 7,680 SF (7680 / 20) - 2= 382 OCC.S
382
x 3.3SF
1,146 SF + 205F = 1,166 SF REQ'D IN SAFE DISPERSAL AREA - "A"
34' x 35' = 1,190 SF SEE SITE PLAN-'A' FOR SAFE DISPERSAL AREA

DEFINITIONS

W = CALCULATED WIDTH OF PUBLIC WAY
P = BUILDING PERIMETER
L_s = LENGTH OF PERIMETER WALL
W_s = WIDTH ≥ 20' OF PUBLIC WAY
A_s = ALLOWABLE AREA FACTOR
A_a = ALLOWABLE AREA
I_a = AREA INCREASE DUE TO FRONTAGE
NS = BUILDING AREA WITHOUT SPRINKLERS
S1 = ONE-STORY BUILDING WITH SPRINKLERS

BUILDING CODE ANALYSIS

GROUP	BLDG	APPLICATION #	BLDG I.D.	BLDG. OCC. TYPE	TYPE OF CONSTR.	ACTUAL HT STRY / FT	ACTUAL AREA PER OCC	BASIC ALLOWABLE AREA
A	R8	116978	MODULAR BUILDINGS CLASSROOM	E	VB	1/1 13'-6"	960	7,680 SF ≤ 9500 S.F. ∴ O.K.
	R9	116978					961	
	R10	116978					962	
	R11	116978					963	
	R12	117375					964	
	R13	117376					965	
	R14	THIS APPLICATION					966	
	R15	THIS APPLICATION					967	

EXITING ANALYSIS

BLD NO	ROOM NAME	FLOOR AREA	OCC LOAD FACTOR	TOTAL OCC	REQ'D EGRESS WIDTH OCC x 0.2 INCH	EXITS PROVIDED
R14	CLASSROOM	960 (NET)	20	48	48 X 0.2 = 9.6"	(1) @ 36"
R15	CLASSROOM	960 (NET)	20	48	48 X 0.2 = 9.6"	(1) @ 36"
TOTAL OCCUPANT LOAD = 96 (* WITHIN THE SCOPE OF WORK ONLY)						

SITE LEGEND

PROPOSED RELOCATABLE BUILDING
NO WORK SCHEDULE FOR THIS BUILDING
AREA OF REFUSE
AC PAVING, SEE CIVIL DWG.S
ACCESSIBLE MEN'S TOILET
ACCESSIBLE WOMEN'S TOILET
(E) ACCESSIBLE BOYS OR MEN'S TOILET
(E) ACCESSIBLE GIRLS OR WOMEN'S TOILET
PROPERTY LINE
DEMOLITION PER PLAN
CHAIN-LINK FENCE
(E) CHAIN-LINK FENCE
PATH OF TRAVEL REFER TO "SITE GENERAL NOTES"
20' FIRE DEPT. ACCESS, SEE SITE PLAN

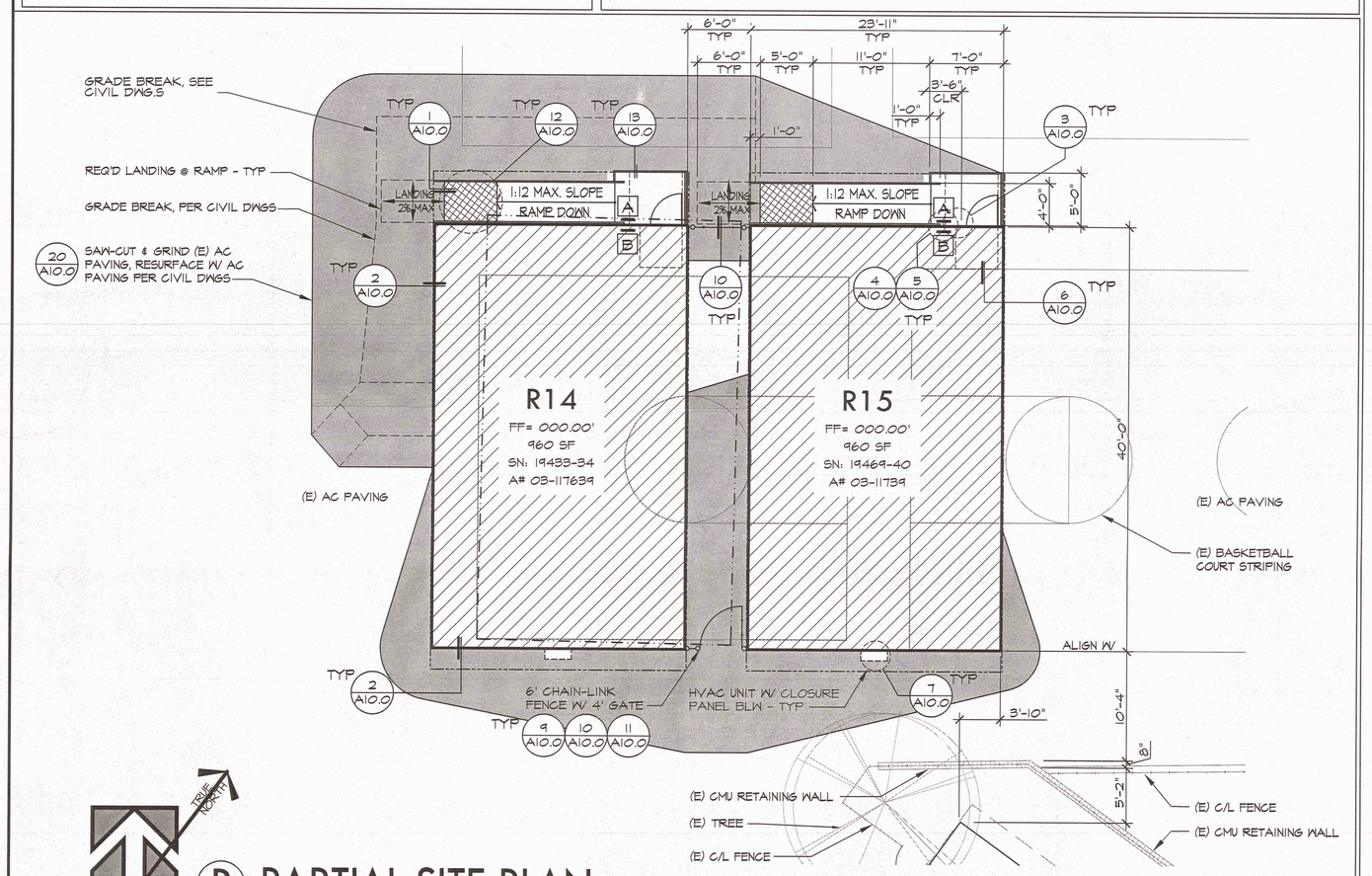

B PARTIAL SITE PLAN — SCALE : 1/8" = 1'-0"

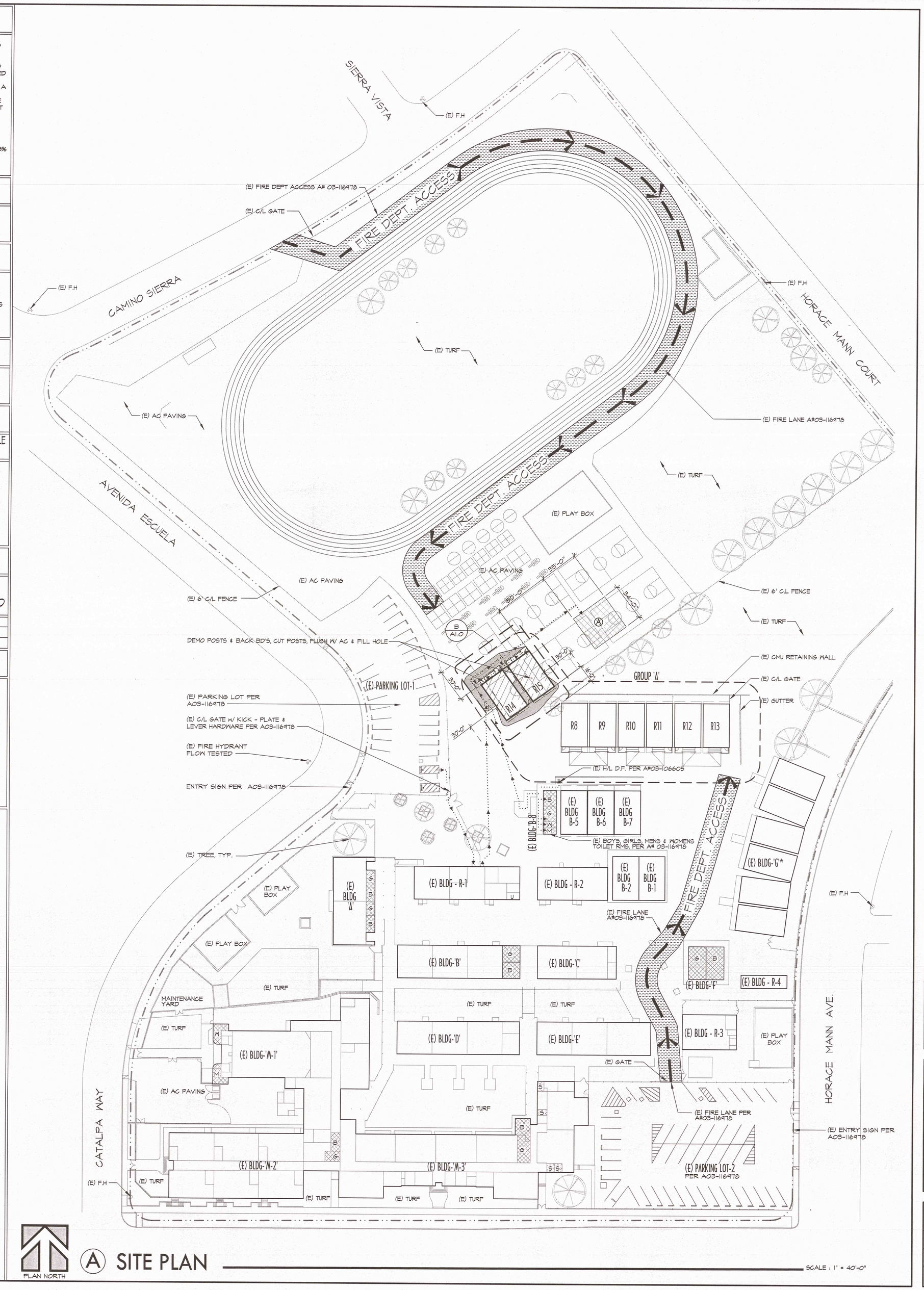

A SITE PLAN — SCALE : 1" = 40'-0"

MARK	DATE	REVISIONS
1		
2		
3		

CHECK AND VERIFY ALL DIMENSIONS BEFORE PROCEEDING WITH THE WORK. REPORT DISCREPANCIES TO THE ARCHITECT. ALL CONSTRUCTION SHALL CONFORM TO THE C.B.C.

SITE IMPROVEMENTS FOR (2)-24'x40' MODULAR CLASSROOMS AT HORACE MANN ELEMENTARY SCHOOL
2710 NILES ST, BAKERSFIELD, CA 93306
FOR
BAKERSFIELD CITY SCHOOL DISTRICT
BAKERSFIELD, KERN COUNTY, CALIFORNIA

IDENTIFICATION STAMP
DIV. OF THE STATE ARCHITECT
OFFICE OF REGULATION SERVICES
APPL: 03-118-42
FILE: 15-6
AC ___ RS CO ___ SF ___
DATE: SEP 08 2017
PTN : 63321-285

ARCHITECT SCI Inc.
1601 NEW STINE ROAD, SUITE 280
BAKERSFIELD, CA 93309
PH: (661) 397-4377
FAX: (661) 397-4378
WWW.SCARCHITECT.COM
LICENSED ARCHITECT STEPHEN L. COBB C 6786 STATE OF CALIFORNIA
STEPHEN L. COBB, NCARB, AIA, LEED® AP BD+C

'A'-SITE PLAN/'B'-PARTIAL SITE PLAN/SITE GENERAL NOTES/SCHOOL DIRECTORY/ FEMA INFO/PARKING CALC/ SAFE DISPERSAL CALC/ DEFINITIONS/BUILDING CODE & EXITING ANALYSIS

JOB NO. 1244
DRAWN : F.C.
CHECKED :
DATE : 05/02/17

1.0
2 OF 3 SHEETS

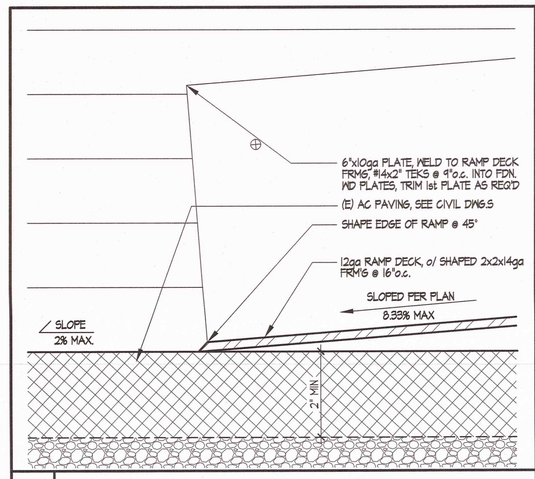

1 RAMP FLUSH TRANSITION SCALE: 6" = 1'-0"

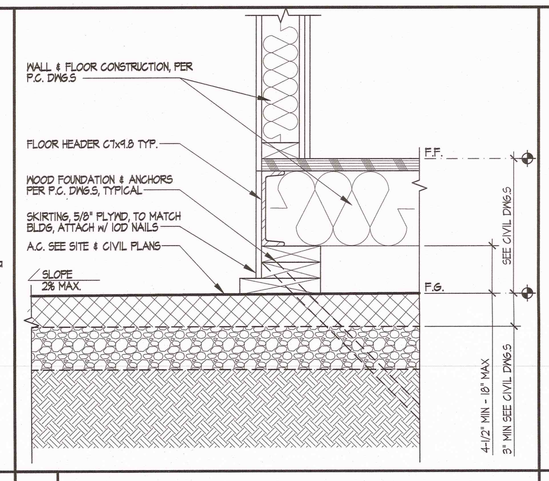

2 A.C. PAVING @ MODULAR SCALE: 1-1/2" = 1'-0"

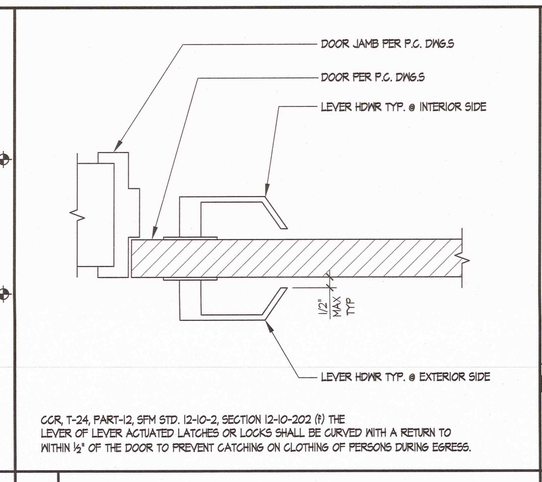

3 DOOR/GATE LEVER HDWR SCALE: 3" = 1'-0"

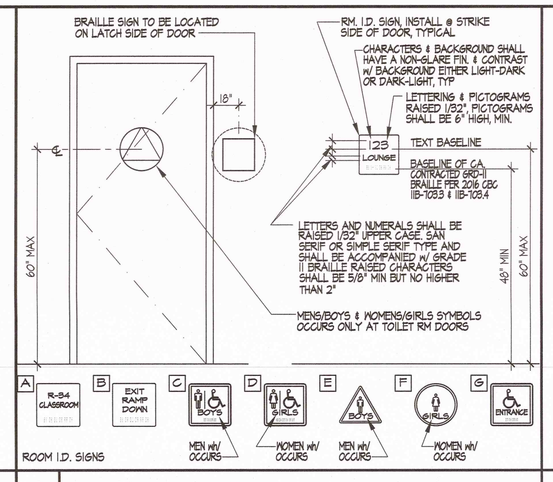

4 DOOR SIGNAGE SCALE: NTS

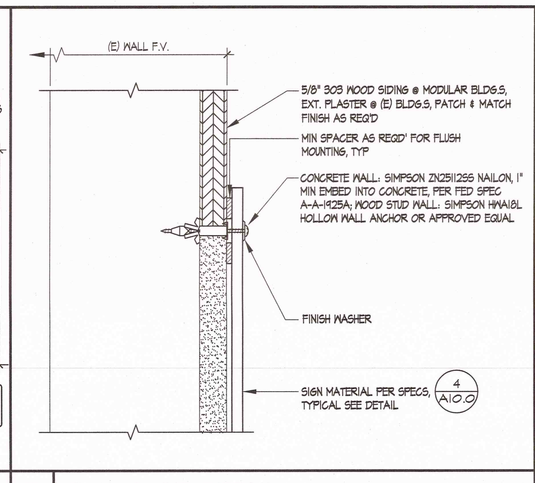

5 SIGN MOUNT DETAIL SCALE: 6" = 1'-0"

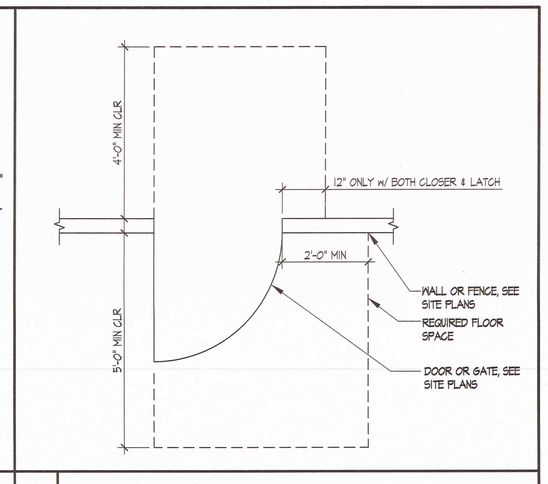

6 CLEARANCE DETAIL SCALE: 1/2" = 1'-0"

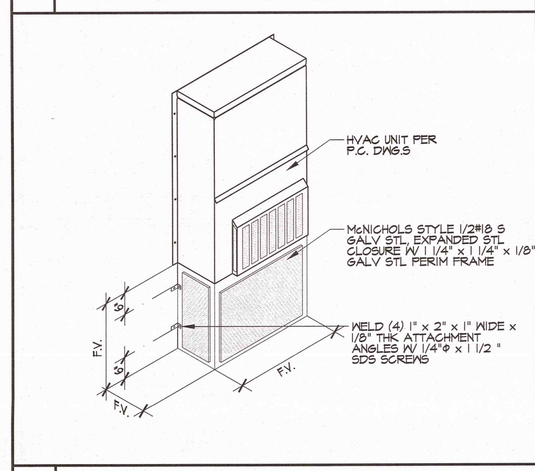

7 HVAC EXP STL CLOSURE BLW HVAC SCALE: NTS

8 XXXXXXX SCALE: xxx = xxx

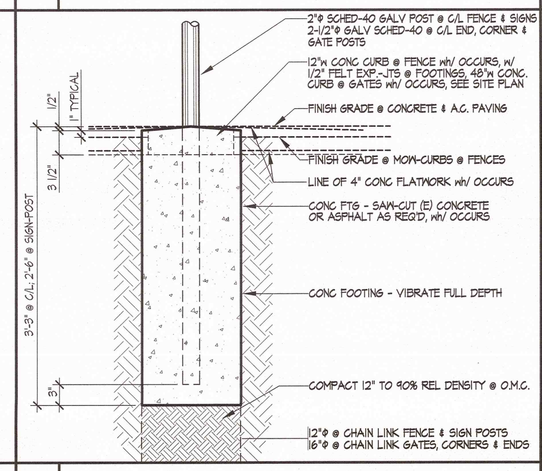

9 POST FOOTING DETAIL SCALE: 1" = 1'-0"

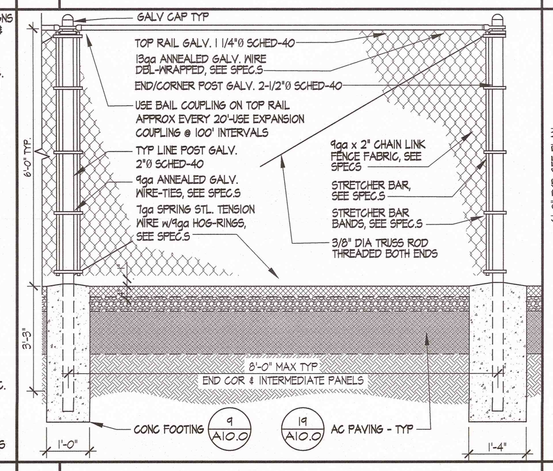

10 CHAIN LINK FENCE SCALE: 1/2" = 1'-0"

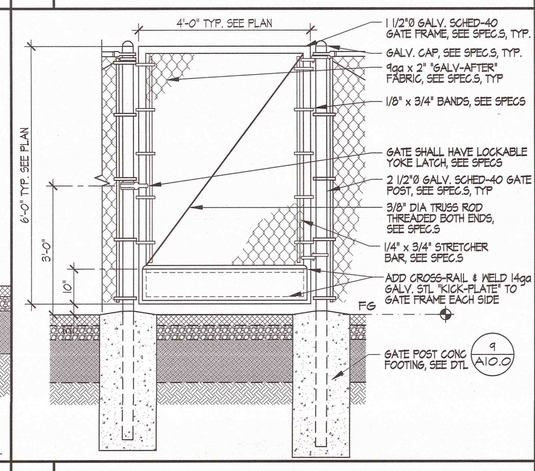

11 CHAIN LINK GATE SCALE: 1/2" = 1'-0"

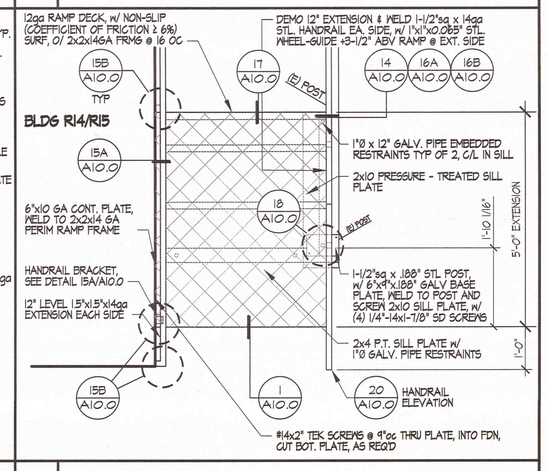

12 RAMP EXTENSION DETAIL SCALE: 1/2" = 1'-0"

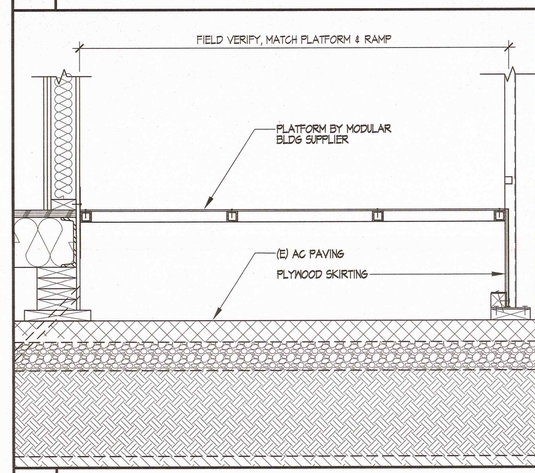

13 PERIM. DETAIL @ PLATFORM SCALE: 1" = 1'-0"

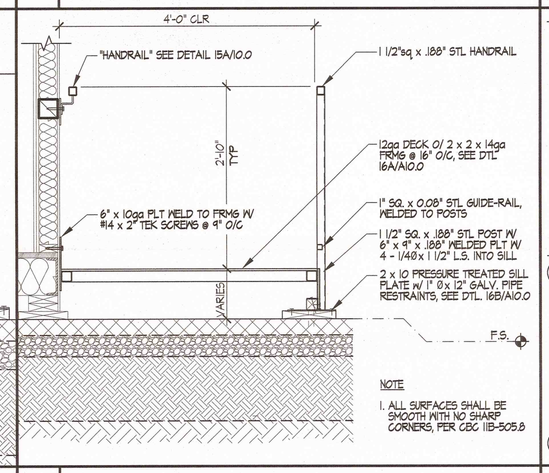

14 SECTION AT RAMP SCALE: 3/4" = 1'-0"

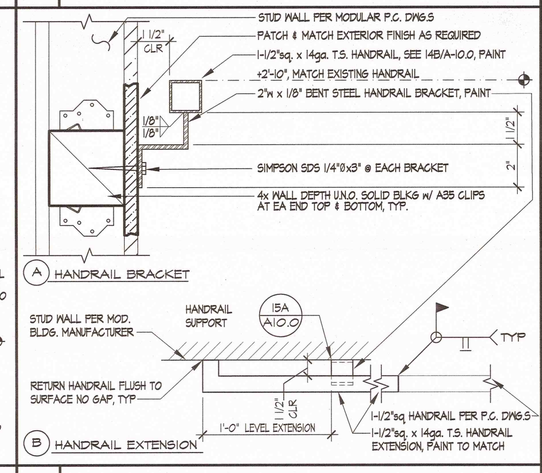

15 WALL HANDRAIL DTL. SCALES: 3" & 1-1/2" = 1'-0"

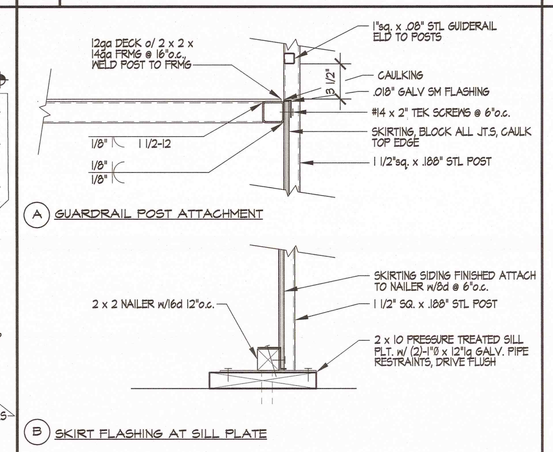

16 DETAILS SCALE: 1 1/2" = 1'-0"

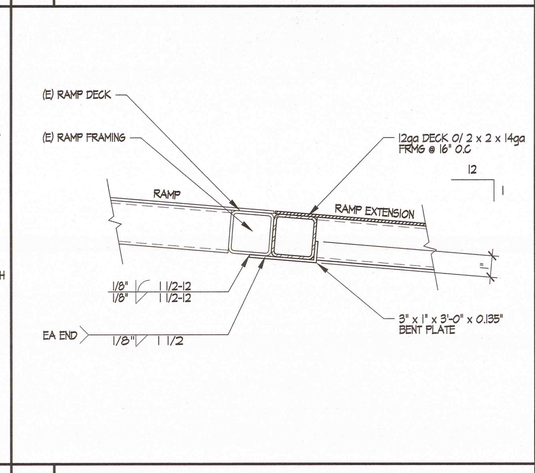

17 RAMP EXTENSION SCALE: 3" = 1'-0"

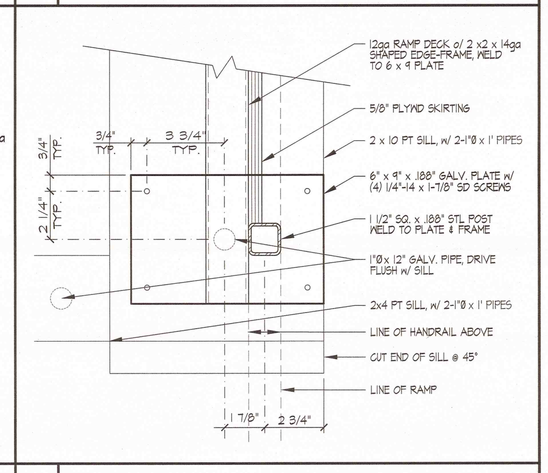

18 BASE PLATE AT RAMP TOE SCALE: 3" = 1'-0"

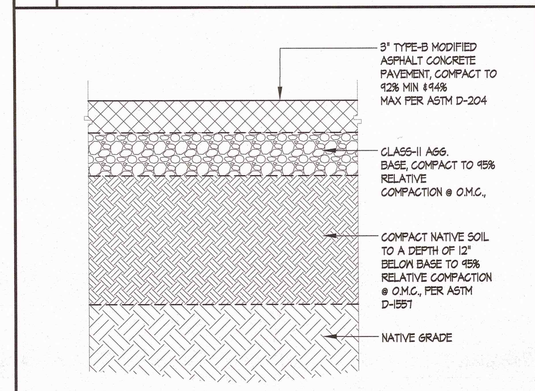

19 ASPHALT CONCRETE PAVING SCALE: 1 1/2" = 1'-0"

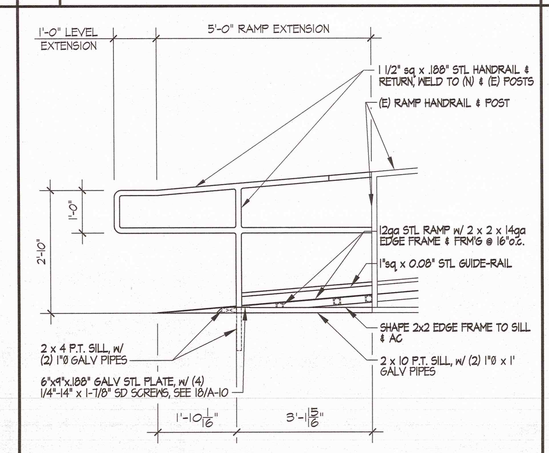

20 HANDRAIL ELEVATION SCALE: 1/2" = 1'-0"

21 XXXXXXX SCALE: xxx = xxx

22 XXXXXXX SCALE: xxx = xxx

23 XXXXXXX SCALE: xxx = xxx

24 XXXXXXX SCALE: xxx = xxx

25 XXXXXXX SCALE: xxx = xxx

26 XXXXXXX SCALE: xxx = xxx

27 XXXXXXX SCALE: xxx = xxx

28 XXXXXXX SCALE: xxx = xxx

29 XXXXXXX SCALE: xxx = xxx

30 XXXXXXX SCALE: xxx = xxx

MARK	DATE	REVISIONS
1		
2		
3		

CHECK AND VERIFY ALL DIMENSIONS BEFORE PROCEEDING WITH THE WORK. REPORT DISCREPANCIES TO THE ARCHITECT. ALL CONSTRUCTION SHALL CONFORM TO THE C.B.C.

SITE IMPROVEMENTS FOR (2)-24'x40' MODULAR CLASSROOMS AT HORACE MANN ELEMENTARY SCHOOL

2710 NILES ST, BAKERSFIELD, CA 93306

FOR

BAKERSFIELD CITY SCHOOL DISTRICT

BAKERSFIELD, KERN COUNTY, CALIFORNIA

IDENTIFICATION STAMP
DIV. OF THE STATE ARCHITECT
OFFICE OF REGULATION SERVICES
APPL: 03-118412
FILE: 15-6
AC ___ PLS ___ SS ___
DATE: SEP 05 2017

PTN : 63321-285

SCARCHITECT inc.
1601 NEW STINE ROAD, SUITE 280
BAKERSFIELD, CA 93309
PH: (661) 397-4377
FAX: (661) 397-4378
WWW.SCARCHITECT.COM

LICENSED ARCHITECT STEPHEN L. CORBIN No. C-18788 REN. 11.30.2018 STATE OF CALIFORNIA

STEPHEN L. CORBIN, NCARB, AIA, LEED AP BD+C

MISCELLANEOUS DETAILS

JOB NO. 1244
DRAWN : F.C.
CHECKED : MMS
DATE : 08-24-17

10.0
2 OF 2 SHEETS

120/208 VOLTS 3 Φ 4 WIRE
400 A. BUSSING 400 A. MAIN BKR.
30 CIRCUIT
BOLT-ON CKT BKRS/PNLBD

(E) PANEL "NR"

10,000 BREAKER A.I.C.
6 1/4" MAX. ENCL. DEPTH
POST MOUNTING
WEATHERPROOF

CKT	BKR	LOAD V.A. ΦA	ΦB	ΦC	DESCRIPTION	DESCRIPTION	ΦC	LOAD V.A. ΦB	ΦA	BKR	CKT
1	2	7660			(E) RELOC. BLDG. "R08"	(E) RELOC. BLDG. "R11"			7660	2	2
3			7380					7380			4
5	2			7660	(E) RELOC. BLDG. "R09"	(E) RELOC. BLDG. "R12"	7660			2	6
7		7380							7380		8
9	2		7660		(E) RELOC. BLDG. "R10"	(E) RELOC. BLDG. "R13"		8700		2	10
11				7380			10600				12
(1) 13	2	3604			NEW RELOC. BLDG. "R14"	SPACE					14
(1) 15			3504								16
(1) 17	2			3604	NEW RELOC. BLDG. "R15"						18
(1) 19		3504									20
21					SPACE						22
23											24
25											26
27											28
29											30

TOTAL LOAD: ΦA: 37,188 V.A. ΦB: 34,624 V.A. ΦC: 36,904 V.A.
L.C.L. x 25%: V.A. V.A. V.A.
37,188 V.A. 34,624 V.A. 36,904 V.A.
304 A 284 A 308 A

PANEL SCHEDULE NOTES:

(1) PROVIDE NEW CIRCUIT BREAKERS TO CONNECT NEW RELOCATABLE BUILDINGS AS SHOWN.

DIVISION OF THE STATE ARCHITECT APPLICABLE CODES AND STANDARDS

CODES:

2016 CALIFORNIA ADMINISTRATIVE CODE, PART 1, TITLE 24 C.C.R.

2016 CALIFORNIA BUILDING CODE (C.B.C.), PART 2, TITLE 24 C.C.R. (2015 INTERNATIONAL BUILDING CODE, VOLUMES 1 AND 2 WITH 2016 CALIFORNIA AMENDMENTS)

2016 CALIFORNIA ELECTRICAL CODE (C.E.C.), PART 3, TITLE 24 C.C.R. (2014 NATIONAL ELECTRICAL CODE WITH 2016 CALIFORNIA AMENDMENTS)

2016 CALIFORNIA MECHANICAL CODE (C.M.C.), PART 4, TITLE 24 C.C.R. (2015 INTERNATIONAL MECHANICAL CODE WITH 2016 CALIFORNIA AMENDMENTS)

2016 CALIFORNIA PLUMBING CODE (C.P.C.), PART 5, TITLE 24 C.C.R. (2015 INTERNATIONAL PLUMBING CODE WITH 2016 CALIFORNIA AMENDMENTS)

2016 CALIFORNIA ENERGY CODE (CEnC), PART 6, TITLE 24 C.C.R.

2016 CALIFORNIA FIRE CODE (C.F.C.), PART 9, TITLE 24 C.C.R. (2015 INTERNATIONAL FIRE CODE WITH 2016 CALIFORNIA AMENDMENTS)

2016 CALIFORNIA REFERENCED STANDARDS CODE (C.R.S.C.), PART 12, TITLE 24 C.C.R.

TITLE 19, C.C.R. PUBLIC SAFETY, STATE FIRE MARSHAL REGULATIONS.

STANDARDS AND GUIDES:

NFPA 72 - NATIONAL FIRE ALARM CODE, 2016 EDITION (CALIFORNIA AMENDED)

ADAAG - AMERICANS WITH DISABILITIES ACT, ACCESSIBILITY GUIDELINES

UL 38 - MANUAL ACTUATED SIGNALING BOXES, 2008 EDITION

UL 268 - SMOKE DETECTORS FOR FIRE PROTECTIVE SIGNALING SYSTEMS, 2016 EDITION

UL 268A - SMOKE DETECTORS FOR DUCT APPLICATIONS, 2008 EDITION

UL 464 - AUDIBLE SIGNAL APPLIANCES, 2016 EDITION

UL 521 - HEAT DETECTORS FOR FIRE PROTECTIVE SIGNALING SYSTEMS, 1999 EDITION (WITH REVISIONS THROUGH JULY 2005)

UL 864 - CONTROL UNITS FOR FIRE PROTECTIVE SIGNALING SYSTEMS, 2014 EDITION

SEISMIC ANCHORAGE REQUIREMENTS

MECHANICAL, ELECTRICAL AND PLUMBING ANCHORAGE NOTE

ALL MECHANICAL, PLUMBING AND ELECTRICAL COMPONENTS SHALL BE ANCHORED AND INSTALLED PER THE DETAILS ON THE DSA APPROVED CONSTRUCTION DOCUMENTS. WHERE NO DETAIL IS INDICATED, THE FOLLOWING COMPONENTS SHALL BE ANCHORED OR BRACED TO MEET THE FORCE AND DISPLACEMENT REQUIREMENTS PRESCRIBED IN THE 2016 CBC, SECTIONS 1616A.1.18 THROUGH 1616A.1.26 AND ASCE 7-10 CHAPTER 13, 26 AND 30.

1. ALL PERMANENT EQUIPMENT AND COMPONENTS.
2. TEMPORARY OR MOVABLE EQUIPMENT THAT IS PERMANENTLY ATTACHED (e.g. HARD WIRED) TO THE BUILDING UTILITY SERVICES SUCH AS ELECTRICITY, GAS OR WATER.
3. MOVABLE EQUIPMENT WHICH IS STATIONED IN ONE PLACE FOR MORE THAN 8 HOURS AND HEAVIER THAN 400 POUNDS OR HAS A CENTER OF MASS LOCATED 4 FEET OR MORE ABOVE THE ADJACENT FLOOR OR ROOF LEVEL THAT DIRECTLY SUPPORT THE COMPONENT ARE REQUIRED TO BE ANCHORED WITH TEMPORARY ATTACHMENTS.

THE FOLLOWING MECHANICAL AND ELECTRICAL COMPONENTS SHALL BE POSITIVELY ATTACHED TO THE STRUCTURE, BUT THE ATTACHMENT NEED NOT BE DETAILED ON THE PLANS. THESE COMPONENTS SHALL HAVE FLEXIBLE CONNECTIONS PROVIDED BETWEEN THE COMPONENT AND ASSOCIATED DUCTWORK, PIPING AND CONDUIT.

A. COMPONENTS WEIGHING LESS THAN 400 POUNDS AND HAVE A CENTER OF MASS LOCATED 4 FEET OR LESS ABOVE THE ADJACENT FLOOR OR ROOF LEVEL THAT DIRECTLY SUPPORT THE COMPONENT.
B. COMPONENTS WEIGHING LESS THAN 20 POUNDS, OR IN THE CASE OF DISTRIBUTED SYSTEMS, LESS THAN 5 POUNDS PER FOOT, WHICH ARE SUSPENDED FROM A ROOF OR FLOOR OR HUNG FROM A WALL.

FOR THOSE ELEMENTS THAT DO NOT REQUIRE DETAILS ON THE APPROVED DRAWINGS, THE INSTALLATION SHALL BE SUBJECT TO THE APPROVAL OF THE DESIGN PROFESSIONAL IN GENERAL RESPONSIBLE CHARGE OR STRUCTURAL ENGINEER DELEGATED RESPONSIBILITY AND THE DSA DISTRICT STRUCTURAL ENGINEER. THE PROJECT INSPECTOR WILL VERIFY THAT ALL COMPONENTS AND EQUIPMENT HAVE BEEN ANCHORED IN ACCORDANCE WITH ABOVE REQUIREMENTS.

PIPING, DUCTWORK, AND ELECTRICAL DISTRIBUTION SYSTEM BRACING NOTE

PIPING, DUCTWORK, AND ELECTRICAL DISTRIBUTION SYSTEMS SHALL BE BRACED TO COMPLY WITH THE FORCES AND DISPLACEMENTS PRESCRIBED IN ASCE 7-10 SECTION 13.3 AS DEFINED IN ASCE 7-10 SECTION 13.6.5.6, 13.6.7, 13.6.8 AND 2016 CBC, SECTIONS 1616A.1.24, 1616A.1.25, AND 1616A.1.26.

THE METHOD OF SHOWING BRACING AND ATTACHMENTS TO THE STRUCTURE FOR THE IDENTIFIED DISTRIBUTION SYSTEM ARE AS NOTED BELOW. WHEN BRACING AND ATTACHMENTS ARE BASED ON A PREAPPROVED INSTALLATION GUIDE (e.g. SMACNA OR OSHPD OPM), COPIES OF THE BRACING SYSTEM INSTALLATION GUIDE OR MANUAL SHALL BE AVAILABLE ON THE JOBSITE PRIOR TO THE START OF AND DURING THE HANGING AND BRACING OF THE DISTRIBUTION SYSTEMS. THE STRUCTURAL ENGINEER OF RECORD SHALL VERIFY THE ADEQUACY OF THE STRUCTURE TO SUPPORT THE HANGER AND BRACE LOADS.

MECHANICAL PIPING (MP), MECHANICAL DUCTS (MD), PLUMBING PIPING (PP), ELECTRICAL DISTRIBUTION SYSTEMS (E):

MP☐ MD☐ PP☐ E☑ - OPTION 1: DETAILED ON THE APPROVED DRAWINGS WITH PROJECT SPECIFIC NOTES AND DETAILS.

MP☐ MD☐ PP☐ E☐ - OPTION 2: SHALL COMPLY WITH THE APPLICABLE OSHPD PRE-APPROVAL (OPM#) # N/A .

MP☐ MD☐ PP☐ - OPTION 3: SHALL COMPLY WITH THE SMACNA SEISMIC RESTRAINT MANUAL, OSHPD EDITION (2009), INCLUDING ANY ADDENDA. FASTENERS AND OTHER ATTACHMENTS NOT SPECIFICALLY IDENTIFIED IN THE SMACNA SEISMIC RESTRAINT MANUAL, OSHPD EDITION, ARE DETAILED ON THE APPROVED DRAWINGS WITH PROJECT SPECIFIC NOTES AND DETAILS. THE DETAILS SHALL ACCOUNT FOR THE APPLICABLE SEISMIC HAZARD LEVEL N/A AND CONNECTION LEVEL N/A FOR THE PROJECT AND CONDITIONS.

CODE, RULES AND REGULATIONS

ALL WORK AND MATERIALS SHALL COMPLY WITH THE LATEST REGULATIONS OF THE STATE FIRE MARSHAL, CALIFORNIA CODE OF REGULATIONS, SERVING UTILITY COMPANIES AND OTHER APPLICABLE STATE ORDINANCES. NOTHING IN THESE PLANS OR SPECIFICATIONS IS TO BE CONSTRUED AS TO PERMIT WORK NOT CONFORMING TO THESE CODES. WHERE WORK OF A HIGHER DEGREE IS INDICATED IN THE PLANS OR SPECIFICATIONS THIS REQUIREMENT SHALL GOVERN.

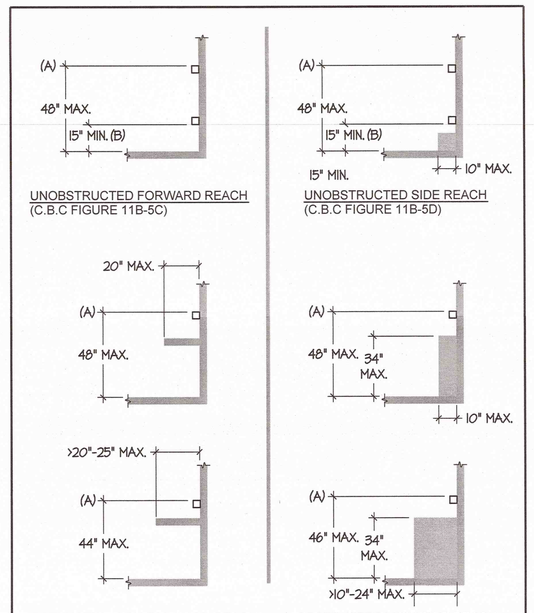

(A) TOP OF OUTLET BOX FOR RECEPTACLES, SWITCHES AND CONTROLS.

(B) BOTTOM OF OUTLET BOX FOR RECEPTACLES, SWITCHES AND CONTROLS.

1 ELECTRICAL RECEPTACLE SWITCH AND CONTROL HEIGHTS

NTS

ELECTRICAL SYMBOLS

ALL DIMENSIONS TO CENTER OF BOX, U.O.N.

	HOME RUN 3/4"C - MIN. (PANEL A, CIRCUIT #3)
	CONDUIT RUN IN WALL OR ATTIC (1/2"C - 2 #12 AWG THWN + 1 #12 GND)
	CONDUIT RUN IN FLOOR OR UG (1/2"C - 2 #12 AWG THWN + 1 #12 GND)
	CONDUIT STUB - CAPPED AND LABELED.
1	ELECTRICAL KEYNOTE #1, REFER TO NOTES ON SAME SHEET
U.O.N.	UNLESS OTHERWISE NOTED
W.P.	WEATHERPROOF
	TERMINAL CABINET (SIZE AS SHOWN)
	ELECTRICAL PANELBOARD
J	JUNCTION BOX EQUIPPED WITH BLANK COVER
SD	ADDRESSABLE SMOKE DETECTOR WITH CARBON MONOXIDE SENSING CELL MOUNTED ON CEILING
HD	HEAT DETECTOR MOUNTED IN ACCESSIBLE ATTIC
(A) SF 30	FIRE ALARM VISUAL STROBE, 30 CANDELA, CEILING MOUNTED
(B) SP W.P.	FIRE ALARM EXTERIOR SPEAKER ON WALL
SCM	ADDRESSABLE SUPERVISED OUTPUT MODULE
J	SURFACE MOUNTED JUNCTION BOX ON WALL

ELECTRICAL SYMBOLS NOTES:

(A) REFER TO FIRE ALARM DEVICES ELEVATION, DETAIL #5/E3.2 FOR RESPECTIVE MOUNTING HEIGHTS.

(B) SEE FIRE ALARM PLAN FOR MOUNTING HEIGHTS.

COMPLETE AUTOMATIC FIRE ALARM SYSTEM PLAN SUBMITTAL

THE FIRE ALARM SYSTEM SHOWN ON THESE PLANS HAS BEEN SUBMITTED AND APPROVED BY THE DIVISION OF THE STATE ARCHITECT. ANY SUBSTITUTION OF THE FIRE ALARM SYSTEM SHALL BE RESUBMITTED TO THE ARCHITECT FOR REVIEW AND APPROVAL. THE CONTRACTOR SHALL PAY ANY ADDITIONAL FEES THAT ARE INCURRED DUE TO THIS SUBSTITUTION.

THE FIRE ALARM SYSTEM SHALL BE A TOTAL (COMPLETE) AUTOMATIC HEAT AND SMOKE DETECTION SYSTEM, PER C.F.C. SECTION 907.2.3.6, AND SHALL COVER EVERY ROOM AND/OR AREA. UPON THE ACTIVATION OF ANY INITIATION DEVICE THE FIRE ALARM SYSTEM SHALL ALERT ALL OCCUPANTS AND TRANSMIT THE ALARM, SUPERVISORY, AND TROUBLE SIGNALS TO AN APPROVED SUPERVISING STATION (C.F.C. SECTION 907.2.3.5).

MARK	DATE	REVISIONS
1		
2		
3		

CHECK AND VERIFY ALL DIMENSIONS BEFORE PROCEEDING WITH THE WORK. REPORT DISCREPANCIES TO THE ARCHITECT. ALL CONSTRUCTION SHALL CONFORM TO THE C.B.C.

SITE IMPROVEMENTS FOR (2)-24'x40' MODULAR CLASSROOMS AT
HORACE MANN ELEMENTARY SCHOOL
2710 NILES ST, BAKERSFIELD, CA 93306
FOR
BAKERSFIELD CITY SCHOOL DISTRICT
BAKERSFIELD, KERN COUNTY, CALIFORNIA

IDENTIFICATION STAMP
DIV. OF THE STATE ARCHITECT
OFFICE OF REGULATION SERVICES
APPL: 03-118412
FILE: 15-6
AC. M FLS Co SS TB
DATE: SEP 08 2017
PTN : 63321-285

SCARCHITECT INC
1601 NEW STINE ROAD, SUITE 280
BAKERSFIELD, CA 93309
PH: (661) 397-4377
FAX: (661) 397-4378
WWW.SCARCHITECT.COM
LICENSED ARCHITECT STEPHEN J. CORBIN No. C-17067 STATE OF CALIFORNIA
STEPHEN J. CORBIN, NCARB, AIA, LEED AP BD+C

THOMAS WILLIAM SING No. E-7468 Exp. 6/30/19 ELECTRICAL STATE OF CALIFORNIA
Rose Sing and Associates, Inc.
Electrical Consultants
131 S. Dunworth — (559)733-2671
Visalia, California 93292-6705

CODES, NOTES, ELECTRICAL SYMBOLS AND PANEL SCHEDULE

JOB NO.	1244
DRAWN :	CS
CHECKED :	
DATE :	09/01/17

1.1 OF SHEETS

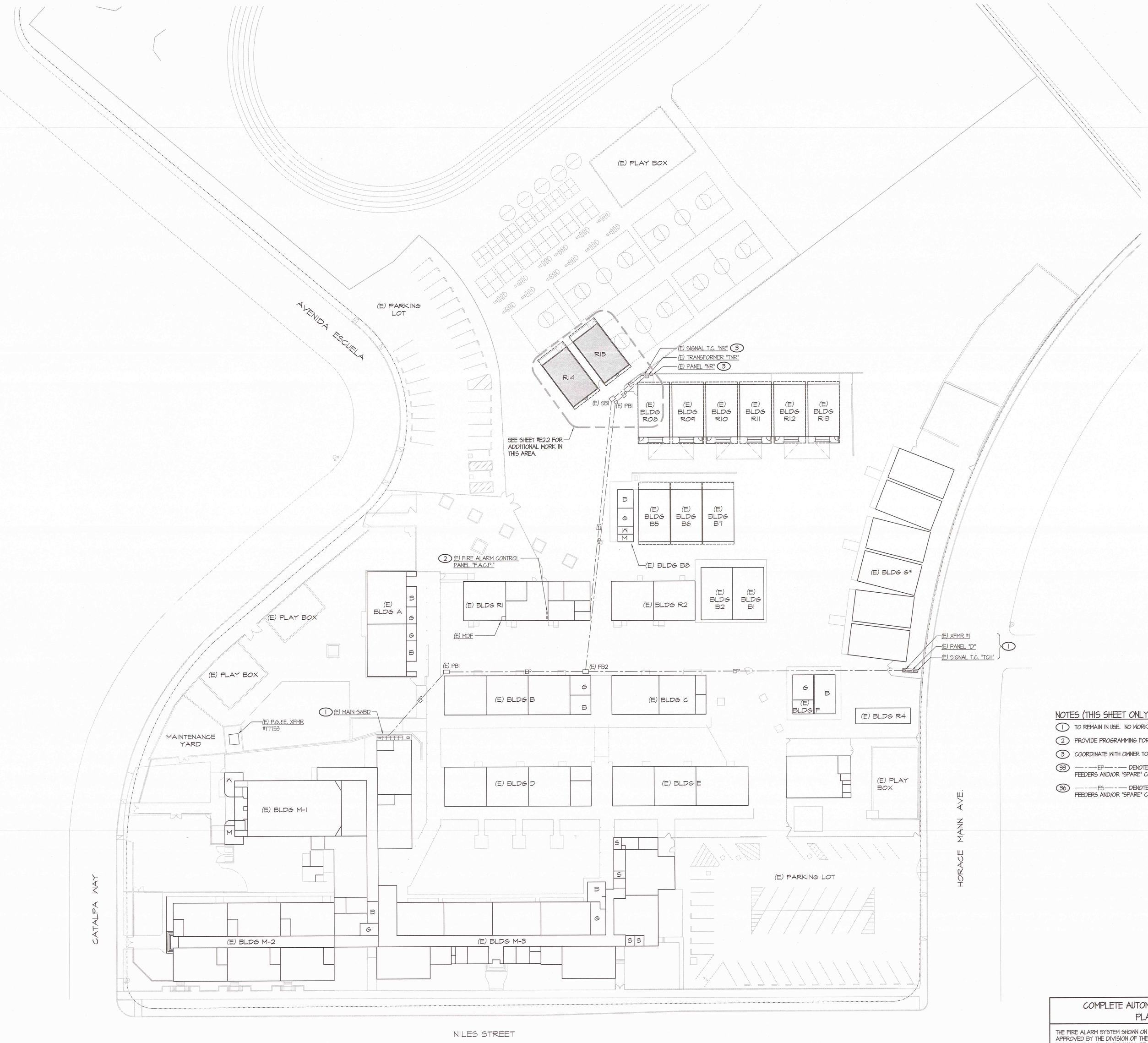

PLAN NORTH

SITE ELECTRICAL PLAN - OVERALL

SCALE : 1" = 30'-0"

NOTES (THIS SHEET ONLY):

1. TO REMAIN IN USE. NO WORK REQUIRED.
2. PROVIDE PROGRAMMING FOR NEW DEVICES AS REQUIRED.
3. COORDINATE WITH OWNER TO ACCESS AS REQUIRED TO DO NEW WORK PER PLANS.

33 — - —EP— - — DENOTES THE APPROXIMATE LOCATION OF EXISTING "POWER" FEEDERS AND/OR "SPARE" CONDUITS. VERIFY EXACT LOCATION AT SITE.

36 — - —ES— - — DENOTES THE APPROXIMATE LOCATION OF EXISTING "SIGNALS" FEEDERS AND/OR "SPARE" CONDUITS. VERIFY EXACT LOCATION AT SITE.

COMPLETE AUTOMATIC FIRE ALARM SYSTEM PLAN SUBMITTAL

THE FIRE ALARM SYSTEM SHOWN ON THESE PLANS HAS BEEN SUBMITTED AND APPROVED BY THE DIVISION OF THE STATE ARCHITECT. ANY SUBSTITUTION OF THE FIRE ALARM SYSTEM SHALL BE RESUBMITTED TO THE ARCHITECT FOR REVIEW AND APPROVAL. THE CONTRACTOR SHALL PAY ANY ADDITIONAL FEES THAT ARE INCURRED DUE TO THIS SUBSTITUTION.

THE FIRE ALARM SYSTEM SHALL BE A TOTAL (COMPLETE) AUTOMATIC HEAT AND SMOKE DETECTION SYSTEM, PER C.F.C. SECTION 907.2.3.6, AND SHALL COVER EVERY ROOM AND/OR AREA. UPON THE ACTIVATION OF ANY INITIATION DEVICE THE FIRE ALARM SYSTEM SHALL ALERT ALL OCCUPANTS AND TRANSMIT THE ALARM, SUPERVISORY, AND TROUBLE SIGNALS TO AN APPROVED SUPERVISING STATION (C.F.C. SECTION 907.2.3.5).

MARK	DATE	REVISIONS
1		
2		
3		

CHECK AND VERIFY ALL DIMENSIONS BEFORE PROCEEDING WITH THE WORK. REPORT DISCREPANCIES TO THE ARCHITECT. ALL CONSTRUCTION SHALL CONFORM TO THE C.B.C.

SITE IMPROVEMENTS FOR (2)-24'x40' MODULAR CLASSROOMS AT
HORACE MANN ELEMENTARY SCHOOL
2710 NILES ST, BAKERSFIELD, CA 93306
FOR
BAKERSFIELD CITY SCHOOL DISTRICT
BAKERSFIELD, KERN COUNTY, CALIFORNIA

IDENTIFICATION STAMP
DIV. OF THE STATE ARCHITECT
OFFICE OF REGULATION SERVICES
APPL: 03-118412
FILE: 15-6
AC ___ FLS ___ SS ___
DATE: SEP 06 2017
PTN : 63321-285

ARCHITECT inc.
1601 NEW STINE ROAD, SUITE 280
BAKERSFIELD, CA 93309
PH: (661) 397-4377
FAX: (661) 397-4378
WWW.SCARCHITECT.COM

LICENSED ARCHITECT STEPHEN J. CORWIN No. C-17382 STATE OF CALIFORNIA
STEPHEN J. CORWIN, NCARB, AIA, LEED AP BD+C

LICENSED PROFESSIONAL ENGINEER THEODORE W. SING No. E-14507 Exp. 6/30/19 ELECTRICAL STATE OF CALIFORNIA
Rose Sing and Associates, Inc.
Electrical Consultants
131 S. Dunworth – (559)733-2671
Visalia, California 93292-6705

OVERALL SITE ELECTRICAL PLAN

JOB NO.	1244
DRAWN :	CS
CHECKED :	
DATE :	09/01/17

E

2.1 OF SHEETS

Z:\Drafting\Jobs\KSA\SCHOOLS\BFIELD\Bakersfield City Schools\Horace Mann – 2017 Reissue\E2.1.dwg DATE SAVED: 09/01/17 DATE PLOTTED: 09/01/17 BY: Casey JOB #: 17-087-J

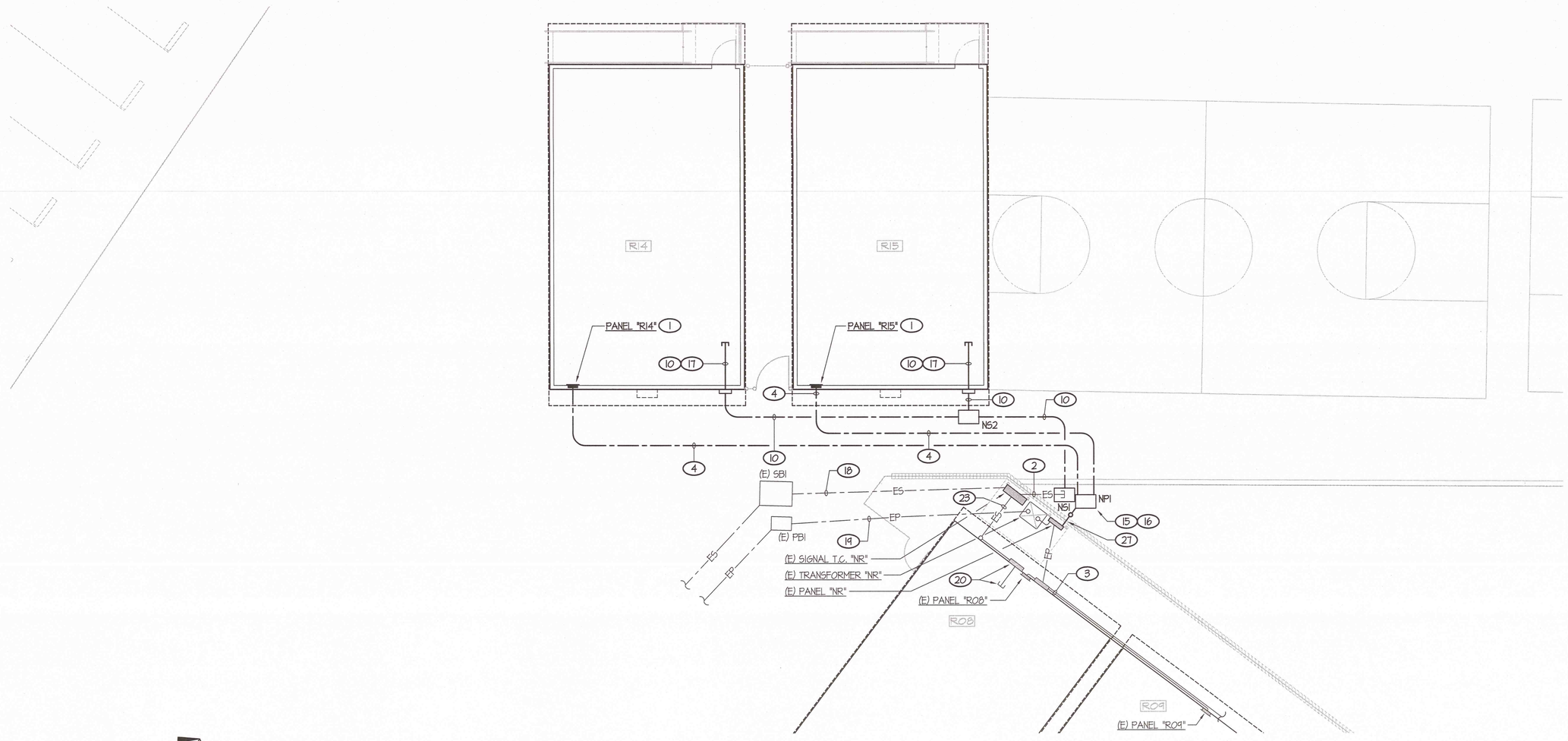

POWER AND SIGNALS PLAN

SCALE : 1/8" = 1'-0"

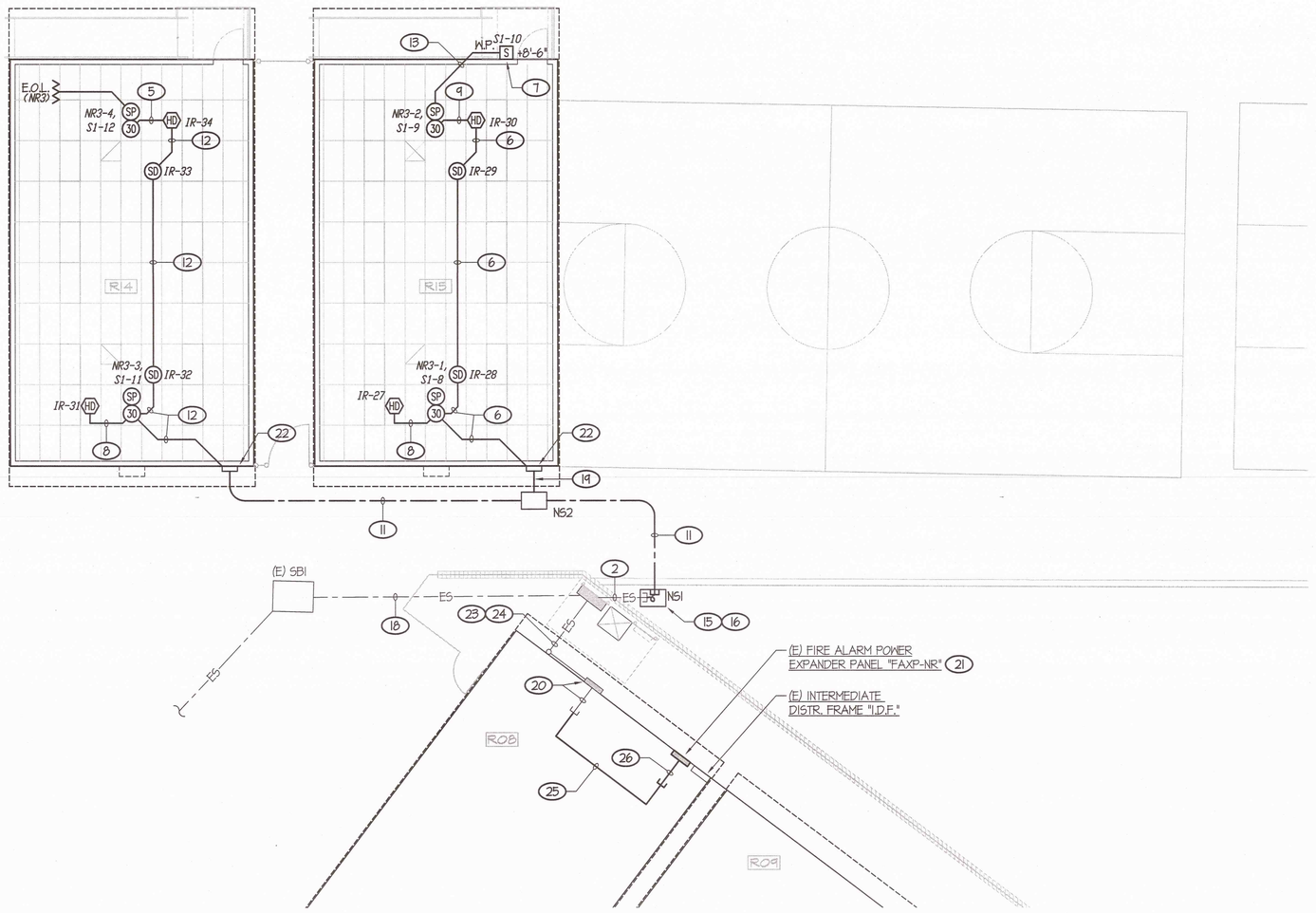

FIRE ALARM PLAN

SCALE : 1/8" = 1'-0"

NOTES (THIS SHEET ONLY):

1. CONNECT PANEL PROVIDED WITH RELOCATABLE BUILDING.
2. FOUR EXISTING SPARE 1 1/2"C STUB OUTS. VERIFY EXACT LOCATION AT SITE AND INTERCEPT ALL STUB OUTS WITH A NEW PULL BOX AS SHOWN. IN ONE 1 1/2"C, PULL IN ONE "SFA" CABLE, TWO "FS" CABLES AND 2 #12. REMAINING 1 1/2" CONDUITS SHALL BE FOR OWNER'S USE.
3. EXISTING CONDUITS ARE SURFACE MOUNTED "HORIZONTALLY" ON REAR WALL OF RELOCATABLE BUILDINGS AND ARE TO REMAIN.
4. FEEDER PER ONE LINE DIAGRAM, DETAIL #1/E4.1.
5. 3/4"C - TWO "FS" CABLES, 2 #12.
6. 1 1/4"C - ONE "FA" CABLE, TWO "FS" CABLES, 4 #12.
7. USE JUNCTION BOX SUPPLIED WITH RELOCATABLE BUILDING FOR MOUNTING OF EXTERIOR SPEAKER.
8. 3/4"C - ONE "FA" CABLE.
9. 1"C - TWO "FS" CABLES, 4 #12.
10. PROVIDE ONE 3/4"C, ONE 1"C, ONE 1 1/4"C AND ONE 2"C FOR USE BY THE OWNER.
11. 1 1/4"C - ONE "SFA" CABLE, TWO "FS" CABLES, ONE "NF" CABLE.
12. 1"C - ONE "FA" CABLE, TWO "FS" CABLES, 2 #12.
13. 3/4"C - TWO "FS" CABLES.
14. AT THIS DEVICE PICK UP AND EXTEND THE EXISTING SLC, NOTIFICATION APPLIANCE CIRCUITS AND SPEAKER CIRCUITS AND EXTEND AS SHOWN. MOVE END OF LINE RESISTORS. SEE KEYNOTE #16.
15. NEW PULL BOX PER DETAIL #3/E4.1. TYPICAL, U.O.N.
16. LOCATE TO CAPTURE EXISTING CONDUIT STUB OUTS.
17. STUB CONDUITS INTO ACCESSIBLE ATTIC SPACE ABOVE T-BAR CEILING.
18. EXISTING SIGNALS CONDUITS TO REMAIN FOR OWNER'S USE.
19. 1 1/4"C - ONE "SFA" CABLE, TWO "FS" CABLES AND TWO "NF" CABLES.
20. EXISTING PULL AN WITH THREE 1 1/2"C STUBS INTO ACCESSIBLE ATTIC SPACE T-BAR CEILING.
21. CONNECT TO "SPARE" NOTIFICATION APPLIANCE CIRCUIT.
22. PROVIDE A 18" W x 24" H x 6" D, NEMA 3R SCREW COVER ENCLOSURE. MOUNT UP HIGH ON WALL SO THAT TOP 8" OF THE ENCLOSURE IS LOCATED ABOVE INTERIOR T-BAR CEILING.
23. EXISTING SIGNALS AND FIRE ALARM FEEDERS. 1 1/2"C - SIX CAT. 5E CABLES, PLUS TWO MULTI-PAIR CABLES; 1 1/2"C - TWO 6-STRAND FIBER OPTIC CABLES (50/125) AND 1 1/2"C- THREE "SFA" CABLES.
24. PULL-IN NEW "FN" CABLE (FOR NEW N.A.C. "NR3") THRU THE EXISTING 1 1/2" CONDUIT CONTAINING THE THREE "SFA" CABLES.
25. RUN NEW "FN" CABLE THRU ACCESSIBLE ATTIC SPACE ABOVE T-BAR CEILING.
26. RUN A NEW 3/4" CONDUIT FROM THE EXISTING FIRE ALARM POWER EXPANDER PANEL "FAXP-NR" AND STUB INTO THE ACCESSIBLE ATTIC SPACE ABOVE T-BAR CEILING. PULL IN NEW "FN" CABLE.
27. RUN A 2" GALV. RIGID CONDUIT OUT OF THE BACK OF THE EXISTING PANEL AND CONTINUE HORIZONTALLY TO ABOVE THE EXISTING C.M.U. WALL. PROVIDE AN "LB" CONDUIT BODY, TURN CONDUIT DOWN AND RUN TO BELOW EXISTING FINISH GRADE. CONVERT G.R.C. TO PVC 40 AT ELBOW. PULL-IN NEW CONDUCTORS PER ONE LINE DIAGRAM, DETAIL #1/E4.1.

COMPLETE AUTOMATIC FIRE ALARM SYSTEM PLAN SUBMITTAL

THE FIRE ALARM SYSTEM SHOWN ON THESE PLANS HAS BEEN SUBMITTED AND APPROVED BY THE DIVISION OF THE STATE ARCHITECT. ANY SUBSTITUTION OF THE FIRE ALARM SYSTEM SHALL BE RESUBMITTED TO THE ARCHITECT FOR REVIEW AND APPROVAL. THE CONTRACTOR SHALL PAY ANY ADDITIONAL FEES THAT ARE INCURRED DUE TO THIS SUBSTITUTION.

THE FIRE ALARM SYSTEM SHALL BE A TOTAL (COMPLETE) AUTOMATIC HEAT AND SMOKE DETECTION SYSTEM, PER C.F.C. SECTION 907.2.9.6, AND SHALL COVER EVERY ROOM AND/OR AREA. UPON THE ACTIVATION OF ANY INITIATION DEVICE THE FIRE ALARM SYSTEM SHALL ALERT ALL OCCUPANTS AND TRANSMIT THE ALARM, SUPERVISORY, AND TROUBLE SIGNALS TO AN APPROVED SUPERVISING STATION (C.F.C. SECTION 907.2.9.5).

MARK	DATE	REVISIONS
1		
2		
3		

CHECK AND VERIFY ALL DIMENSIONS BEFORE PROCEEDING WITH THE WORK. REPORT DISCREPANCIES TO THE ARCHITECT. ALL CONSTRUCTION SHALL CONFORM TO THE C.B.C.

SITE IMPROVEMENTS FOR (2)-24'x40' MODULAR CLASSROOMS AT
HORACE MANN ELEMENTARY SCHOOL
2710 NILES ST, BAKERSFIELD, CA 93306
FOR
BAKERSFIELD CITY SCHOOL DISTRICT
BAKERSFIELD, KERN COUNTY, CALIFORNIA

IDENTIFICATION STAMP
DIV. OF THE STATE ARCHITECT
OFFICE OF REGULATION SERVICES
APPL: 03-112-412
FILE: 15-6
AC ___ FLS ___ SS ___
DATE: SEP 08 2017
PTN : 63321-285

SCARCHITECT INC.
1601 NEW STINE ROAD, SUITE 280
BAKERSFIELD, CA 93309
PH: (661) 397-4377
FAX: (661) 397-4378
WWW.SCARCHITECT.COM

LICENSED ARCHITECT STEPHEN J. CORRIN No. C-16788 STATE OF CALIFORNIA
STEPHEN J. CORRIN, NCARB, AIA, LEED®AP BD+C

REGISTERED PROFESSIONAL ENGINEER THEODORE W. SING No. E-14607 Exp. 6/30/19 ELECTRICAL STATE OF CALIFORNIA

Rose Sing and Associates, Inc.
Electrical Consultants
131 S. Dunworth – (559)733-2671
Visalia, California 93292-6705

POWER AND SIGNALS PLAN
AND FIRE ALARM PLAN

JOB NO.	1244
DRAWN :	CS
CHECKED :	
DATE :	09/01/17

2.2 OF SHEETS

(E) FIRE ALARM CONTROL PANEL "F.A.C.P." BATTERY CALCULATION

DESCRIPTION	QUANTITY	SUPV. CURRENT EACH	SUPV. CURRENT SUB-TOTAL	ALARM CURRENT EACH	ALARM CURRENT SUB-TOTAL
(E) FIRE ALARM CONTROL PANEL	1	0.300	0.300	0.350	0.350
(E) SUPERVISED OUTPUT MODULE	1	0.00022	0.00022	0.006	0.006
(E) ATTIC HEAT DETECTOR	12	0.00035	0.0042	0.00050	0.006
(E) CEILING MTD. SMOKE DETECTOR	15	0.00045	0.00675	0.00054	0.0081
(E) MONITOR MODULES	2	0.00055	0.0011	0.00066	0.00132
NEW CEILING MTD. SMOKE DETECTOR	4	0.00045	0.0018	0.00054	0.00216
NEW ATTIC HEAT DETECTOR	4	0.00035	0.0014	0.00050	0.0020
	TOTALS		0.3155		0.376

TOTAL ALARM CURRENT OF 0.376 x 0.250 (15 MINUTES) = 0.0940 A.H.
TOTAL SUPERVISORY CURRENT OF 0.3155 x 24 HOURS = 7.752 A.H.
TOTAL AMP HOURS REQUIRED 7.666 A.H.
x 1.2 SAFETY FACTOR
9.199 A.H.

PANEL HAS (E) 18.0 AMP HOUR BATTERIES.

(E) FIRE ALARM POWER EXPANDER PANEL "FAXP-NR" BATTERY CALCULATION

DESCRIPTION	QUANTITY	SUPV. CURRENT EACH	SUPV. CURRENT SUB-TOTAL	ALARM CURRENT EACH	ALARM CURRENT SUB-TOTAL
(E) FIRE ALARM POWER EXPANDER PANEL	1	0.09	0.09	0.175	0.175
(E) SPEAKER 30cd STROBE (CEILING)	12	—	—	0.088	1.056
NEW SPEAKER 30cd STROBE (CEILING)	4	—	—	0.088	0.352
	TOTALS		0.09		1.583

TOTAL ALARM CURRENT OF 1.583 x 0.250 (15 MINUTES) = 0.396 A.H.
TOTAL SUPERVISORY CURRENT OF 0.09 x 24 HOURS = 2.160 A.H.
TOTAL AMP HOURS REQUIRED 2.556 A.H.
x 1.2 SAFETY FACTOR
3.067 A.H.

PANEL HAS (E) 7.0 AMP HOUR BATTERIES.

(E) FIRE ALARM DIGITAL VOICE PANEL "F.A.D.V." BATTERY CALCULATION

DESCRIPTION	QUANTITY	SUPV. CURRENT EACH	SUPV. CURRENT SUB-TOTAL	ALARM CURRENT EACH	ALARM CURRENT SUB-TOTAL
(E) FIRE ALARM DIGITAL VOICE PANEL	1	0.186	0.186	0.199	0.199 (A)
	TOTALS		0.186		0.199

TOTAL ALARM CURRENT OF 0.199 x 0.250 (15 MINUTES) = 0.0498 A.H.
TOTAL SUPERVISORY CURRENT OF 0.186 x 24 HOURS = 4.464 A.H.
TOTAL AMP HOURS REQUIRED 5.514 A.H.
x 1.2 SAFETY FACTOR
6.617 A.H.

PANEL HAS (E) 7.0 AMP HOUR BATTERIES.

(E) FIRE ALARM AMPLIFIER PANEL BATTERY CALCULATION

DESCRIPTION	QUANTITY	SUPV. CURRENT EACH	SUPV. CURRENT SUB-TOTAL	ALARM CURRENT EACH	ALARM CURRENT SUB-TOTAL
(E) FIRE ALARM AMPLIFIER PANEL	1	0.3112	0.3112	2.714	2.714 (B)
	TOTALS		0.3112		2.714

TOTAL ALARM CURRENT OF 2.714 x 0.250 (15 MINUTES) = 0.679 A.H.
TOTAL SUPERVISORY CURRENT OF 0.3112 x 24 HOURS = 7.488 A.H.
TOTAL AMP HOURS REQUIRED 8.167 A.H.
x 1.2 SAFETY FACTOR
9.800 A.H.

AMPLIFIER HAS (E) 18.0 AMP HOUR BATTERIES.

BATTERY CALCULATION NOTES:

(A) THIS IS MAXIMUM VALUE WITH ALL OUTPUTS USED.
(B) THIS IS MAXIMUM VALUE OF THE 100 WATT AMPLIFIER.

FIRE ALARM SYSTEM EQUIPMENT SPECIFICATIONS

SYMBOL	DESCRIPTION	MODEL #	CSFM LISTING #	BACKBOX REQUIREMENTS (B)	MOUNTING HEIGHT (TO CENTER U.O.N.)
FACP	(E) FIRE ALARM CONTROL PANEL "FACP"	HOCHIKI #FN-4127 (4 SLC)	7165-0410:0159	INCLUDED	+54"
FAXP	(E) FIRE ALARM NAC POWER EXPANDER	HOCHIKI #FN-642-ULADA-R	7315-0410:0166	INCLUDED	+54"
BATT. CAB.	(E) BATTERY CABINET	HOCHIKI #FN-ACC-R	7165-0410:0159	INCLUDED	+54"
FADV	(E) FIRE ALARM DIGITAL VOICE COMMUNICATIONS CONTROL PANEL	HOCHIKI #FNV-MP-16-R	6911-0410:0175	INCLUDED	+54"
AMP	(E) FIRE ALARM AMPLIFIER (8 CHANNEL)	HOCHIKI #FNV-DPS-100-R	6911-0410:0175	INCLUDED	+54"
DSM	(E) DUAL SYNC. MODULE	GENTEX #AV544	7125-0564:0123	4" SQ. x 2 1/8" D	———
MM	(E) MONITOR MODULE	HOCHIKI #DCP-FRCME-P	7300-0410:0150	4" SQ. x 2 1/8" D	
SOM	(E) SUPERVISED OUTPUT MODULE	HOCHIKI #DCP-SOM-A	7300-0410:0150	4" SQ. x 2 1/8" D	
SD	ADDRESSABLE SMOKE DETECTOR WITH CARBON MONOXIDE SENSING CELL WITH MOUNTING BASE	HOCHIKI #ACD-V #ESB-NSA-6 BASE	7275-0410:0503 7300-0410:0132	3.5" OCTAGON BOX OR 4" OCTAGON BOX WITH RAISED ROUND COVER	PER DETAIL #3/E2.2
HD	ATTIC HEAT DETECTOR (190° FIXED) WITH MOUNTING BASE	HOCHIKI #ACD-V #ESB-NSA-6 BASE	7275-0410:0503 7300-0410:0132	3.5" OCTAGON BOX OR 4" OCTAGON BOX WITH RAISED ROUND COVER	PER DETAIL #3/E2.2
SP W.P.	EXTERIOR WEATHERPROOF SPEAKER, WALL MOUNTED	GENTEX #W65-PK-R	7320-0564:0141	4" SQ. x 1 1/2" D	(C)(D)
SP 30	COMBINATION SPEAKER/30cd STROBE	HOCHIKI #ESSP-K24-CLPR	7320-0410:0194	4" SQ. x 2 1/8" D	
(A) E.O.L.	END OF LINE RESISTOR	———	———	———	———
"FA" CABLE	ADDRESSABLE FIRE ALARM CABLE (INDOORS)	WEST PENN #D990	7161-0854:0101	———	———
"SFA" CABLE	ADDRESSABLE FIRE ALARM CABLE (OUTDOORS)	WEST PENN #A9225	7161-0854:0101	———	———
"FS" CABLE	FIRE ALARM SPEAKER CABLE (INDOOR/OUTDOORS)	WEST PENN #A9G225	7161-0854:0101	———	———
"NF" CABLE	FIRE ALARM NOTIFICATION APPLIANCE CABLE	WEST PENN #A9G221	7161-0854:0101	———	———

NOTES (FIRE ALARM SYSTEM EQUIPMENT SPECIFICATIONS):

(A) END OF LINE RESISTORS FOR NOTIFICATION APPLIANCE CIRCUITS SHALL BE 3.9K OHM, 1/2 WATT.
(B) VERIFY BACKBOX REQUIREMENTS WITH FIRE ALARM SYSTEM EQUIPMENT SUPPLIER PRIOR TO ROUGH-IN.
(C) SEE FIRE ALARM PLAN FOR MOUNTING HEIGHT.
(D) EXTERIOR SPEAKER SHALL BE SUPPLIED WITH A WEATHERPROOF BACKBOX, GENTEX #GBLP.

FIRE ALARM SYSTEM SEQUENCE OF OPERATIONS

RESULT OF OPERATION ⇩ / TYPE OF INITIATION	MANUAL PULL STATION	AREA SMOKE/ HEAT DETECTOR	LOSS OF POWER	SHORT CIRCUIT/ GROUND FAULT	FIRE SPRINKLER RISER WATER FLOW SWITCH	FIRE SPRINKLER RISER TAMPER SWITCH
ANNUNCIATE ALARM AT FIRE ALARM CONTROL PANEL	YES	YES	———	———	YES	———
ANNUNCIATE TROUBLE AT FIRE ALARM CONTROL PANEL	———	———	YES	YES	———	YES
ACTIVATE ALL AUDIBLE ALARMS	YES	YES	———	———	YES	———
ACTIVATE ALL VISUAL ALARMS	YES	YES	———	———	YES	———
TRANSFER TO BATTERY BACK-UP	———	———	YES	———	———	———
ANNUNCIATE AT 24 HR. ATTENDED LOCATION	YES	YES	YES	———	YES	YES
CENTRAL STATION FOR MONITORING (ALARM)	YES	YES	———	———	———	———
CENTRAL STATION FOR MONITORING (TROUBLE)	———	———	YES	———	———	———
CENTRAL STATION FOR MONITORING (SUPERVISORY)	———	———	———	———	———	YES

SPEAKER Db LOSS CALCULATION

SPEAKER VOLTAGE	WIRE SIZE	RESISTANCE PER FOOT	FEET REQUIRED ON CIRCUIT	WIRE RESISTANCE	TOTAL WATTAGE OF SPEAKERS ON CIRCUIT	SPEAKER CURRENT (AMPS)	RESISTANCE OF SPEAKER LOAD	WIRE SIZE	ACTUAL VOLTAGE AT SPEAKER LOAD	ACTUAL WATTS AT SPEAKER LOAD	Db LOSS
53	18	0.1278	195	2.49	6	0.24	104.17	18	24.415871	5.722843571	-0.21

NOTE:

CALCULATION IS BASED ON EACH OF THE "INTERIOR" SPEAKERS TAPPED AT 1 WATT AND EACH OF THE "EXTERIOR" SPEAKERS TAPPED AT 2 WATTS.

SCOPE OF WORK

1. EXTEND THE EXISTING FIRE ALARM SYSTEM TO THE NEW MODULAR CLASSROOMS.
2. PROVIDE NEW ADDRESSABLE INITIATION DEVICES, NOTIFICATION APPLIANCES, CONDUIT, CABLING AND CONDUCTORS AS SHOWN ON THE DRAWINGS.

FIRE ALARM MONITORING NOTE

AUTOMATIC FIRE ALARM SYSTEMS SHALL TRANSMIT THE ALARM, SUPERVISORY AND TROUBLE SIGNALS TO AN APPROVED SUPERVISING STATION IN ACCORDANCE WITH NFPA 72. THE SUPERVISING STATION SHALL BE LISTED AS EITHER UL#X (CENTRAL STATION) OR UL#S (REMOTE AND PROPRIETARY) BY UNDERWRITERS LABORATORY (UL) OR SHALL COMPLY WITH THE REQUIREMENTS OF STANDARD FM 3011. SUPERVISION OF SYSTEM AND LEASED TELEPHONE LINES SHALL BE ARRANGED BY OWNER.

SCHOOLS FIRE ALARM REQUIREMENTS

THE FIRE ALARM SYSTEM SHALL CONFORM TO CALIFORNIA BUILDING CODE, SECTION 907.2.3; CALIFORNIA ELECTRICAL CODE, ARTICLE 760 AND CALIFORNIA FIRE CODE, CHAPTER 9, SECTION 907.

UPON COMPLETION OF THE INSTALLATION OF THE FIRE PROTECTIVE SIGNALING EQUIPMENT, A SATISFACTORY TEST OF THE ENTIRE SYSTEM SHALL BE MADE IN THE PRESENCE OF THE ENFORCING FIRE AGENCY, NFPA 72. IF TESTING RESULTS DETERMINE FIRE ALARM AUDIBILITY DOES NOT MEET 15db OVER AMBIENT NOISE LEVELS, ADDITIONAL FIRE ALARM SIGNALING DEVICES MAY BE REQUIRED BY THE ENFORCING FIRE AGENCY.

FIRE ALARM SYSTEM CERTIFICATION AND DESCRIPTION SHALL BE PROVIDED FOR TESTING AND A PLASTIC LAMINATED COPY SHALL REMAIN (WITH INSTRUCTIONS) AT THE FIRE ALARM CONTROL PANEL PER NFPA 72.

THE FIRE ALARM "CERTIFICATE OF COMPLETION" FORM IN NFPA 72 SHALL BE COMPLETED, SIGNED AND SUBMITTED.

FIRE ALARM LEVEL OF AUDIBILITY

ALARM INDICATING DEVICES OF A FIRE ALARM SYSTEM INTENDED TO ALERT ALL OCCUPANTS SHALL BE SO LOCATED AND UNOBSTRUCTED AS TO CAUSE A LEVEL OF AUDIBILITY OF NOT LESS THAN 15db ABOVE AMBIENT NOISE LEVELS MEASURED FOUR FEET ABOVE THE FLOOR INSIDE BUILDING.

AMBIENT NOISE LEVELS SHALL BE CONSTRUED TO MEAN THAT WHICH CAN NORMALLY BE EXPECTED TO EXIST WHEN THE FACILITY, BUILDING, ROOM OR AREA IS FUNCTIONING UNDER NORMAL OPERATIVE OR WORKING CONDITIONS.

THE FIRE ALARM SIGNAL SHALL COMPLY WITH THE CALIFORNIA EDUCATION CODE, SECTIONS 32000 AND 32004, AND BE A TEMPORAL PATTERN, CODE 3.

GENERAL NOTES:

1. SMOKE DETECTORS SHALL BE INSTALLED 3' AWAY FROM SUPPLY AND RETURN AIR REGISTERS.
2. FINAL FIRE ALARM TEST OF ALL DEVICES SHALL BE WITNESSED BY THE PROJECT INSPECTOR. TEST SHALL INCLUDE ALL INFORMATION PER NFPA 72 FIGURE 7.8.2(g) AND READ OUT VERIFICATION FORM FROM CENTER STATION.
3. UNDERGROUND AND EXTERIOR CONDUITS WILL HAVE WATER-TIGHT FITTINGS. (C.E.C. 110.11 AND 300.6)
4. AUDIBLE DEVICE(S) SHALL BE AT LEAST 15 dBA ABOVE AVERAGE AMBIENT SOUND LEVEL BUT NOT LESS THAN 75 dBA AT 10' OR MORE THAN 110 dBA IN TOTAL, THROUGHOUT (NFPA 72 18.4.1, C.F.C. 907.5.2.1.1 AND C.F.C. 907.5.2.1.2).
5. AUDIBLE DEVICES SHALL SOUND THE CALIFORNIA CODE IN TEMPORAL PATTERN, CODE 3. EXCEPT WHEN ISSUING A VOICE MESSAGE.
6. VISUAL DEVICES SHALL NOT EXCEED TWO FLASHES PER SECOND AND SHALL NOT BE SLOWER THAN ONE FLASH PER SECOND (NFPA 72 18.5.3.1).
7. PROVIDE A COPY OF THE REVISED BATTERY CALCULATION AT THE EXISTING FIRE ALARM CONTROL PANEL AND A COPY OF THE REVISED BATTERY CALCULATION AT THE EXISTING FIRE ALARM POWER EXPANDER PANEL. BATTERY CALCULATION SHALL CONTAIN INFORMATION AS NOTED ON SCHEDULES AND BE PLASTIC LAMINATED. MOUNT ONTO INSIDE FACE OF DOOR.
8. MORE THAN TWO VISIBLE NOTIFICATION APPLIANCES OR GROUPS OF SYNCHRONIZED APPLIANCES IN THE SAME ROOM OR ADJACENT SPACE WITHIN THE FIELD OF VIEW SHALL FLASH IN SYNCHRONIZATION. NFPA 72 18.5.5.4.2(5).
9. THE AUTOMATIC ALARM SYSTEM SHALL BE INSTALLED, TESTED AND MAINTAINED IN ACCORDANCE WITH THE STATE FIRE MARSHAL'S REGULATIONS (C.F.C. 907.1.3).

VOLTAGE DROP CALCULATION (OHM'S LAW)

$$\text{VOLTAGE DROP} = 2\left(\text{DC RESISTANCE AT 75°C FROM TABLE 8, C.E.C.}\right)\left(\frac{\text{LENGTH OF CIRCUIT}}{1000}\right)\left(\text{CURRENT}\right)$$

$$\text{PERCENT VOLTAGE DROP} = \frac{\text{VOLTAGE DROP}}{\text{NOMINAL VOLTAGE}} \times 100$$

1. NEW NOTIFICATION APPLIANCE CIRCUIT NR3 *:

SP/30 : 4 x 0.088A = 0.352A / 0.352A

$$\text{VOLTAGE DROP} = 2\,(1.98)\left(\frac{180'}{1000}\right)(0.352) = 0.251\ \text{V.D.}$$

$$\text{PERCENT VOLTAGE DROP} = \frac{0.251}{24} \times 100 = 1.05\%$$

COMPLETE AUTOMATIC FIRE ALARM SYSTEM PLAN SUBMITTAL

THE FIRE ALARM SYSTEM SHOWN ON THESE PLANS HAS BEEN SUBMITTED AND APPROVED BY THE DIVISION OF THE STATE ARCHITECT. ANY SUBSTITUTION OF THE FIRE ALARM SYSTEM SHALL BE RESUBMITTED TO THE ARCHITECT FOR REVIEW AND APPROVAL. THE CONTRACTOR SHALL PAY ANY ADDITIONAL FEES THAT ARE INCURRED DUE TO THIS SUBSTITUTION.

THE FIRE ALARM SYSTEM SHALL BE A TOTAL (COMPLETE) AUTOMATIC HEAT AND SMOKE DETECTION SYSTEM, PER C.F.C. SECTION 907.2.9.6, AND SHALL COVER EVERY ROOM AND/OR AREA. UPON THE ACTIVATION OF ANY INITIATION DEVICE THE FIRE ALARM SYSTEM SHALL ALERT ALL OCCUPANTS AND TRANSMIT THE ALARM, SUPERVISORY, AND TROUBLE SIGNALS TO AN APPROVED SUPERVISING STATION (C.F.C. SECTION 907.2.9.5).

MARK	DATE	REVISIONS
1		
2		
3		

CHECK AND VERIFY ALL DIMENSIONS BEFORE PROCEEDING WITH THE WORK. REPORT DISCREPANCIES TO THE ARCHITECT. ALL CONSTRUCTION SHALL CONFORM TO THE C.B.C.

SITE IMPROVEMENTS FOR (2)-24'x40' MODULAR CLASSROOMS AT
HORACE MANN ELEMENTARY SCHOOL
2710 NILES ST, BAKERSFIELD, CA 93306
FOR
BAKERSFIELD CITY SCHOOL DISTRICT
BAKERSFIELD, KERN COUNTY, CALIFORNIA

IDENTIFICATION STAMP
DIV. OF THE STATE ARCHITECT
OFFICE OF REGULATION SERVICES
APPL: 03-112412
FILE: 15-6
AC ___ FLS ___ SS ___ TB
DATE: SEP 06 2017
PTN : 63321-285

SCARCHITECT INC.
1601 NEW STINE ROAD, SUITE 280
BAKERSFIELD, CA 93309
PH: (661) 397-4377
FAX: (661) 397-4378
WWW.SCARCHITECT.COM
LICENSED ARCHITECT STEPHEN J. CORBIN C-16788 STATE OF CALIFORNIA
STEPHEN J. CORBIN, NCARB, AIA, LEED®AP BD+C

REGISTERED PROFESSIONAL ENGINEER THEODORE W. ROSE No. E-14607 Exp. 6/30/19 ELECTRICAL STATE OF CALIFORNIA
Rose Sing and Associates, Inc.
Electrical Consultants
131 S. Dunworth – (559)733-2671
Visalia, California 93292-6705

FIRE ALARM SYSTEM EQUIPMENT SPECIFICATIONS, NOTES, BATTERY AND VOLTAGE DROP CALCULATIONS

JOB NO. 1244
DRAWN : CS
CHECKED :
DATE : 09/01/17

3.1
OF SHEETS

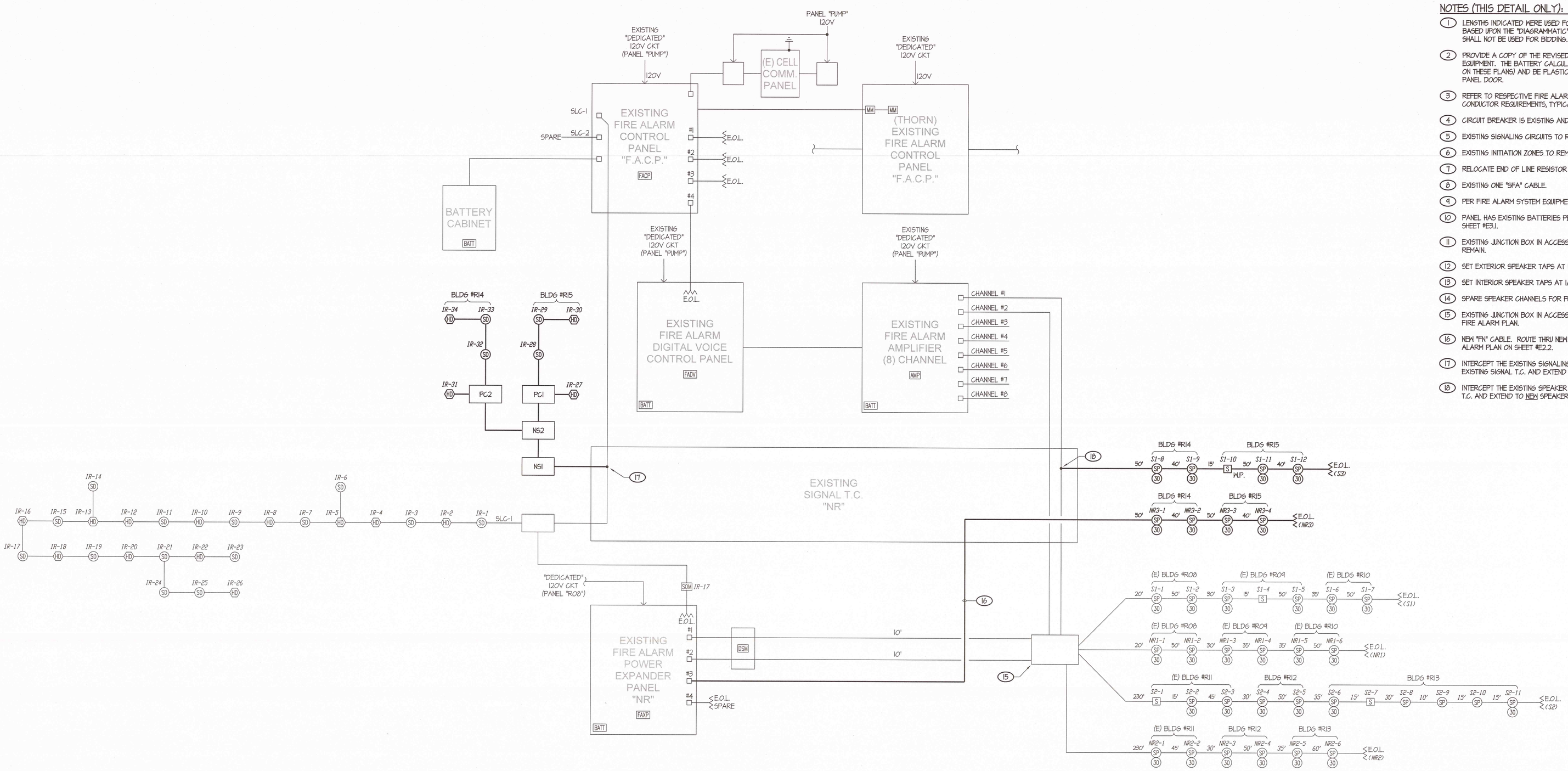

1 FIRE ALARM SYSTEM RISER DIAGRAM

NTS

NOTES (THIS DETAIL ONLY):

1. LENGTHS INDICATED HERE USED FOR CALCULATIONS/DESIGN PURPOSES ONLY AND BASED UPON THE "DIAGRAMMATIC" LAYOUT SHOWN ON THE DRAWINGS. LENGTHS SHALL NOT BE USED FOR BIDDING.
2. PROVIDE A COPY OF THE REVISED BATTERY CALCULATION FOR THE FIRE ALARM EQUIPMENT. THE BATTERY CALCULATION SHALL CONTAIN INFORMATION (AS NOTED ON THESE PLANS) AND BE PLASTIC LAMINATED. MOUNT ONTO INSIDE FACE OF PANEL DOOR.
3. REFER TO RESPECTIVE FIRE ALARM PLAN FOR CONDUIT AND CABLING/ CONDUCTOR REQUIREMENTS, TYPICAL.
4. CIRCUIT BREAKER IS EXISTING AND IS EQUIPPED WITH A LOCK-ON ACCESSORY.
5. EXISTING SIGNALING CIRCUITS TO REMAIN. NO WORK REQUIRED.
6. EXISTING INITIATION ZONES TO REMAIN. NO WORK REQUIRED.
7. RELOCATE END OF LINE RESISTOR TO LAST DEVICE AS SHOWN.
8. EXISTING ONE "SFA" CABLE.
9. PER FIRE ALARM SYSTEM EQUIPMENT SPECIFICATION. SEE SHEET #E3.1.
10. PANEL HAS EXISTING BATTERIES PER RESPECTIVE BATTERY CALCULATION ON SHEET #E3.1.
11. EXISTING JUNCTION BOX IN ACCESSIBLE ATTIC SPACE OF BUILDING #R08 TO REMAIN.
12. SET EXTERIOR SPEAKER TAPS AT 1 WATT, TYPICAL.
13. SET INTERIOR SPEAKER TAPS AT 1/2 WATT, TYPICAL.
14. SPARE SPEAKER CHANNELS FOR FUTURE USE.
15. EXISTING JUNCTION BOX IN ACCESSIBLE ATTIC SPACE OF BUILDING #R08 PER FIRE ALARM PLAN.
16. NEW "FN" CABLE. ROUTE THRU NEW CONDUITS AND EXISTING CONDUITS PER FIRE ALARM PLAN ON SHEET #E2.2.
17. INTERCEPT THE EXISTING SIGNALING LINE CIRCUIT "SLC" CABLE INSIDE OF THE EXISTING SIGNAL T.C. AND EXTEND TO NEW ADDRESSABLE DEVICE AS SHOWN.
18. INTERCEPT THE EXISTING SPEAKER CIRCUIT "S1" INSIDE OF THE EXISTING SIGNAL T.C. AND EXTEND TO NEW SPEAKER/STROBES AND EXTERIOR SPEAKER.

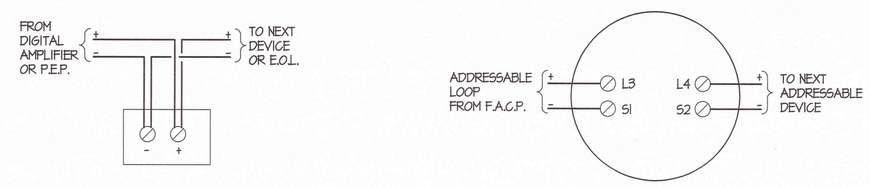

SPEAKER, STROBE, OR COMBINATION SPEAKER/STROBE

SMOKE OR HEAT DETECTOR

2 FIRE ALARM EQUIPMENT WIRING DIAGRAMS

NTS

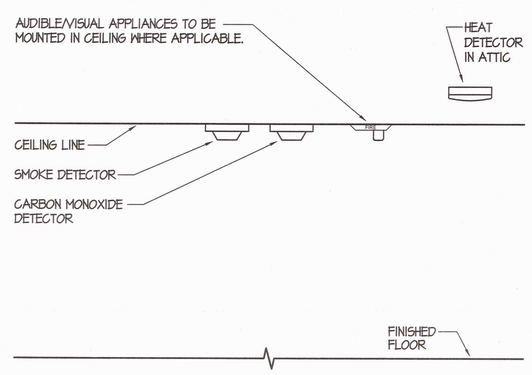

3 FIRE ALARM DEVICES ELEVATION

NTS

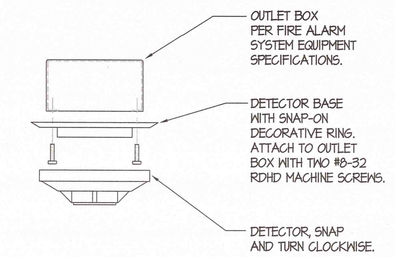

ADDRESSABLE SMOKE OR HEAT DETECTOR

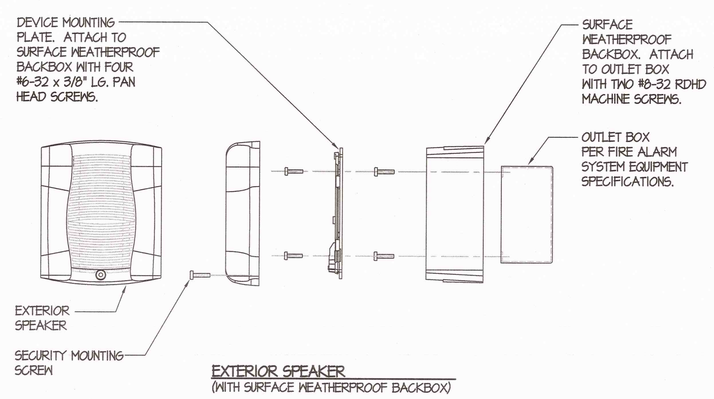

EXTERIOR SPEAKER
(WITH SURFACE WEATHERPROOF BACKBOX)

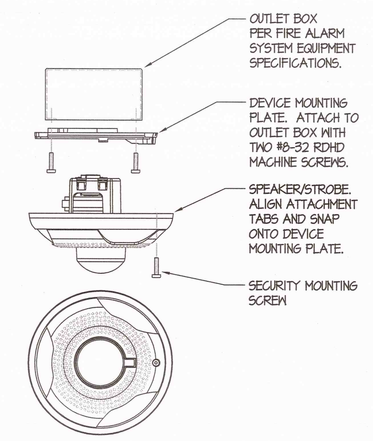

CEILING SPEAKER/STROBE

5 FIRE ALARM DEVICE MOUNTING

NTS

COMPLETE AUTOMATIC FIRE ALARM SYSTEM PLAN SUBMITTAL

THE FIRE ALARM SYSTEM SHOWN ON THESE PLANS HAS BEEN SUBMITTED AND APPROVED BY THE DIVISION OF THE STATE ARCHITECT. ANY SUBSTITUTION OF THE FIRE ALARM SYSTEM SHALL BE RESUBMITTED TO THE ARCHITECT FOR REVIEW AND APPROVAL. THE CONTRACTOR SHALL PAY ANY ADDITIONAL FEES THAT ARE INCURRED DUE TO THIS SUBSTITUTION.

THE FIRE ALARM SYSTEM SHALL BE A TOTAL (COMPLETE) AUTOMATIC HEAT AND SMOKE DETECTION SYSTEM, PER C.F.C. SECTION 907.2.9.6, AND SHALL COVER EVERY ROOM AND/OR AREA. UPON THE ACTIVATION OF ANY INITIATION DEVICE THE FIRE ALARM SYSTEM SHALL ALERT ALL OCCUPANTS AND TRANSMIT THE ALARM, SUPERVISORY, AND TROUBLE SIGNALS TO AN APPROVED SUPERVISING STATION (C.F.C. SECTION 907.2.9.5).

MARK	DATE	REVISIONS
1		
2		
3		

CHECK AND VERIFY ALL DIMENSIONS BEFORE PROCEEDING WITH THE WORK. REPORT DISCREPANCIES TO THE ARCHITECT. ALL CONSTRUCTION SHALL CONFORM TO THE C.B.C.

SITE IMPROVEMENTS FOR (2)-24'x40' MODULAR CLASSROOMS AT HORACE MANN ELEMENTARY SCHOOL

2710 NILES ST, BAKERSFIELD, CA 93306

FOR

BAKERSFIELD CITY SCHOOL DISTRICT

BAKERSFIELD, KERN COUNTY, CALIFORNIA

IDENTIFICATION STAMP
DIV. OF THE STATE ARCHITECT
OFFICE OF REGULATION SERVICES
APPL: 02-118412
FILE: 15-6
AC. FLS SS
DATE: SEP 06 2017

PTN : 63321-285

SCARCHITECT INC
1601 NEW STINE ROAD, SUITE 280
BAKERSFIELD, CA 93309
PH: (661) 397-4377
FAX: (661) 397-4378
WWW.SCARCHITECT.COM

STEPHEN J. CORBIN, NCARB, AIA, LEED®AP BD+C

Rose Sing and Associates, Inc.
Electrical Consultants
131 S. Dunworth – (559)733-2671
Visalia, California 93292-6705

FIRE ALARM SYSTEM RISER
RISER DIAGRAM AND DETAILS

JOB NO.	1244
DRAWN :	CS
CHECKED :	
DATE :	09/01/17

3.2
OF SHEETS

Z:\Drafting\Jobs\RSA\SCHOOLS\BFIELD\Bakersfield City Schools\Horace Mann - 2017 Reboot\E3.2.dwg DATE SAVED: 09/01/17 DATE PLOTTED: 09/01/17 BY: Casey JOB # 17-087-JJ

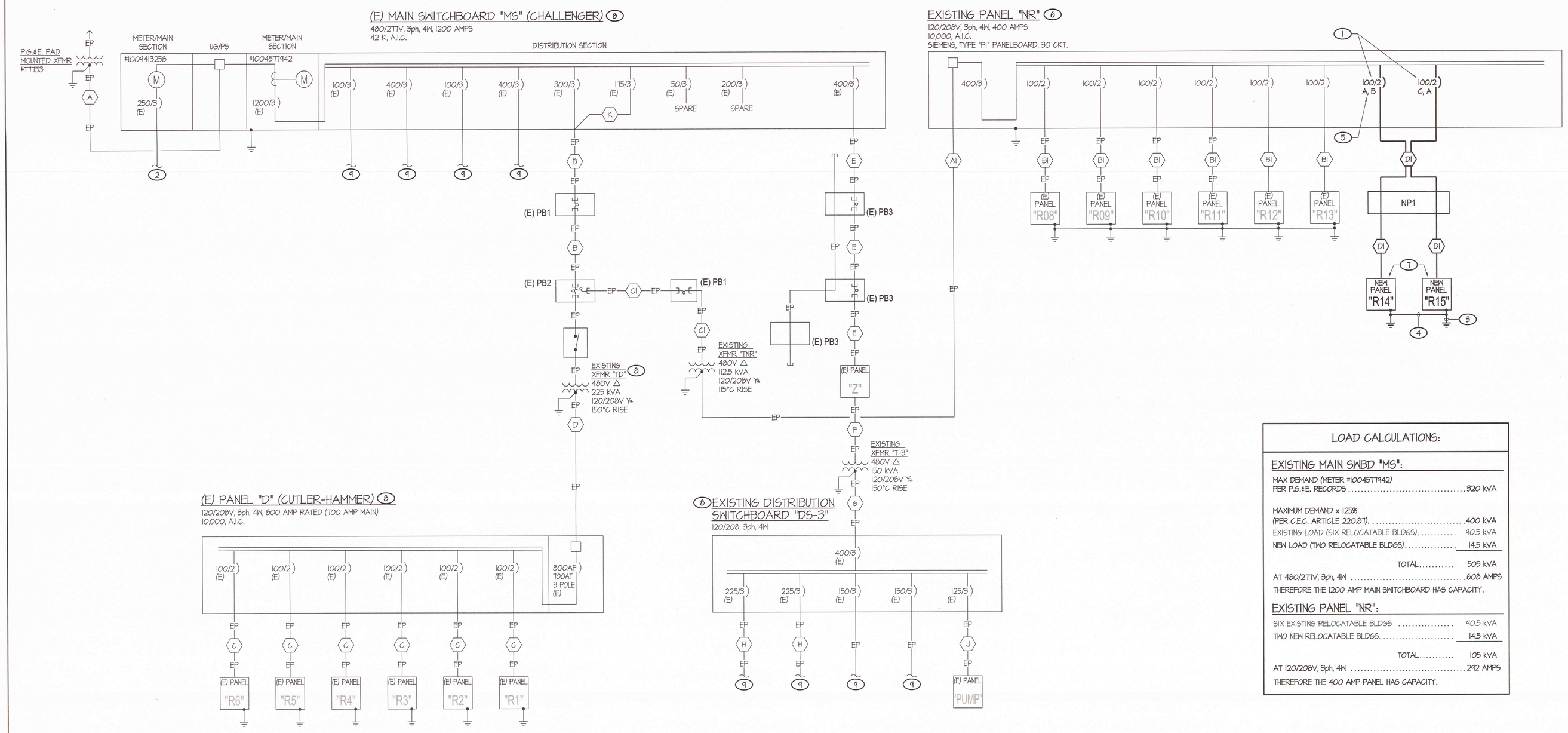

1 ONE LINE DIAGRAM

NTS

LOAD CALCULATIONS:

EXISTING MAIN SWBD "MS":

MAX DEMAND (METER #1004577442) PER P.G.&E. RECORDS	320 kVA
MAXIMUM DEMAND x 125% (PER C.E.C. ARTICLE 220.87).	400 kVA
EXISTING LOAD (SIX RELOCATABLE BLDGS).	90.5 kVA
NEW LOAD (TWO RELOCATABLE BLDGS).	14.5 kVA
TOTAL	505 kVA
AT 480/277V, 3ph, 4W	608 AMPS

THEREFORE THE 1200 AMP MAIN SWITCHBOARD HAS CAPACITY.

EXISTING PANEL "NR":

SIX EXISTING RELOCATABLE BLDGS	90.5 kVA
TWO NEW RELOCATABLE BLDGS.	14.5 kVA
TOTAL	105 kVA
AT 120/208V, 3ph, 4W	292 AMPS

THEREFORE THE 400 AMP PANEL HAS CAPACITY.

ONE LINE DIAGRAM NOTES:

1. PROVIDE NEW CIRCUIT BREAKER. MATCH EXISTING A.I.C..
2. FEEDER TO EXISTING BRINE CHILLER. NO WORK REQUIRED.
3. BOND AND GROUND PER DETAIL #4/E4.1. TYPICAL OF 2.
4. 1 #4 BAR CU BETWEEN ADJACENT GROUND RODS.
5. LETTERS DENOTE THE RESPECTIVE PHASES WHICH THE 2-POLE CIRCUIT BREAKER SHALL BE CONNECTED ONTO.
6. DO NEW WORK AS NOTED.
7. CONNECT PANEL PROVIDED WITH RELOCATABLE BUILDING.
8. TO REMAIN IN USE. NO WORK REQUIRED.
9. VARIOUS FEEDERS AND CIRCUIT BREAKERS TO REMAIN. NO WORK REQUIRED.

FEEDER SCHEDULE:

(ALL CONDUCTORS IN 480V OR 480/277V UNDERGROUND FEEDERS SHALL BE CU-XHHW-2. ALL OTHER CONDUCTORS , INCLUDING THE EQUIPMENT GROUNDING CONDUCTOR, SHALL BE CU-THWN-2 FOR #8 AWG OR LARGER AND CU-THWN FOR #10 AWG OR SMALLER).

- (A) EXISTING PG&E SECONDARY TO REMAIN.
- (B) (E) 4"C - 3 #300 kcmiL + 6 #4/0 + 1 #4 GND.
- (C) (E) 1 1/2"C - 3 #2 + 1 #8 GND.
- (D) (E) TWO 3"C - 4 #400 kcmil + 1 #1/0 GND IN EACH.
- (E) (E) 3 1/2"C - 4 #350 MCM CU.
- (F) (E) 2"C - 3 #3/0 AWG CU.
- (G) (E) 3 1/2"C - 4 #500 MCM CU.
- (H) (E) 3"C - 3 #4/0 AWG CU.
- (J) (E) 1 1/2"C (NIPPLE) - 4 #1 + 1 #6 GND.
- (K) (E) 3 #2/0 + 1 #4 GND (CU-XHHW-2).
- (A1) (E) TWO 3 1/2"C - 4 #350 kcmil + 1 #1 GND IN EACH CONDUIT.
- (B1) (E) 1 1/2" C - 3 #2 + 1 #8 GND.
- (C1) (E) 2"C - 3 #2/0 + 1 #4 GND (CU-XHHW-2).
- (D1) 1 1/2"C - 3 #1 + 1 #8 GND.
- (D2) 2"C - 6 #1 + 2 #8 GNDS.

NOTE:

ALL VOLTAGE DROP CALCULATIONS ARE DONE USING 80% OF THE AMP RATING OF THE EQUIPMENT BEING SUPPLIED.

NTS

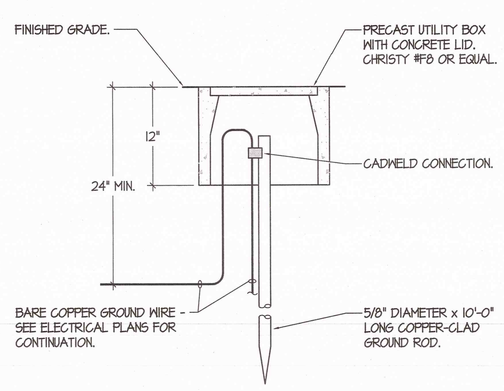

2 GROUND ROD DETAIL

NTS

PULL BOX	NP1	NS1, NS2				
W	17"	17"				
L	30"	30"				

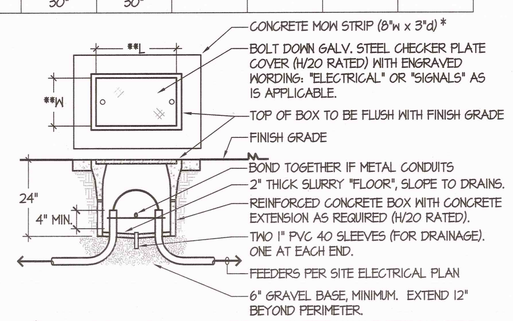

*NOTE: WHERE PULL BOX IS ADJACENT TO CONCRETE WALK, EXTEND MONSTRIP TO CONNECT WITH WALK. FOAM SEAL ALL CONDUITS IN YARD BOXES.

**NOTE: INTERIOR DIMENSIONS MEASURED AT "OPENING" OF PULL BOX.

3 PULL BOX

NTS

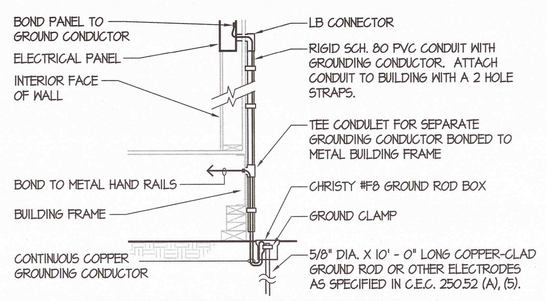

TEST SPECIFICATION FOR GROUNDING ELECTRODE SYSTEM -
THE GROUNDING ELECTRODE(S) SHALL BE TESTED BY THE FALL OF POTENTIAL METHOD AS SPECIFIED IN IEEE STD. 81-1983 & SHOWN TO BE 25 OHMS OR LESS. A COPY OF THE TEST REPORT SHALL BE SUBMITTED TO THE ARCHITECT. PROJECT INSPECTOR SHALL WITNESS TEST.

4 GROUNDING ELECTRODE SYSTEM

BOND ADJACENT MODULES TOGETHER WITH 1 #6 CU.

NTS

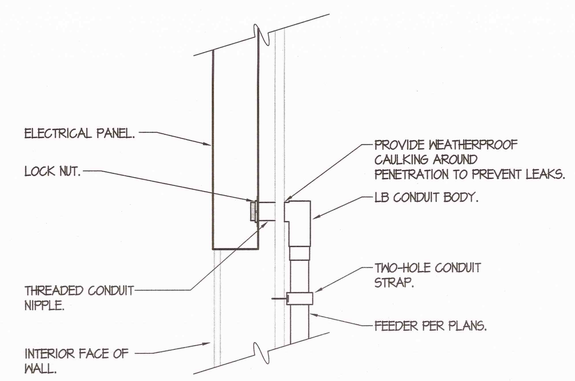

5 CONDUIT PENETRATION AT ELECTRICAL PANEL

NTS

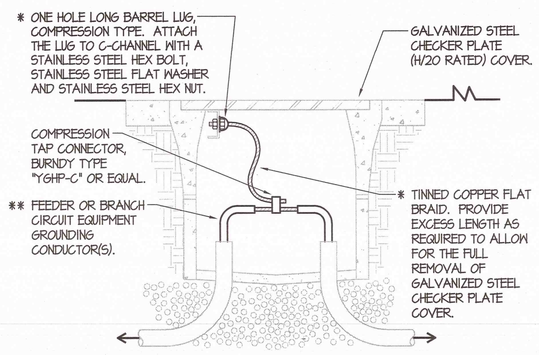

* THIS TYPICAL WORK SHALL BE PROVIDED FOR EACH SECTION OF A MULTIPLE SECTION COVER.

** THIS TYPICAL WORK SHALL BE DONE FOR EACH OF THE LARGEST FEEDER (OR BRANCH CIRCUIT) EQUIPMENT GROUNDING CONDUCTOR, PASSING THRU THE RESPECTIVE PULL BOX, WHICH ORIGINATE FROM SEPARATE SOURCES/VOLTAGES.

MATRIX FOR TINNED COPPER FLAT BRAID

SIZE OF EQUIPMENT GROUNDING CONDUCTOR (a)	ALPHA WIRE PART #	OLYMPIC WIRE AND CABLE PART #
#8	1233	708
#6	1235	710
#4	1234	710
#2 THRU #1/0	1240	713
#2/0 THRU #4/0	1241	714

(a) CONTAINED IN THE LARGEST FEEDER (OR BRANCH CIRCUIT) PASSING THRU THE RESPECTIVE PULL BOX.

6 BONDING OF STEEL CHECKER PLATE COVERS

(AT ALL "POWER" PULL BOXES)

NTS

MARK	DATE	REVISIONS
1		
2		
3		

CHECK AND VERIFY ALL DIMENSIONS BEFORE PROCEEDING WITH THE WORK. REPORT DISCREPANCIES TO THE ARCHITECT. ALL CONSTRUCTION SHALL CONFORM TO THE C.B.C.

SITE IMPROVEMENTS FOR (2)-24'x40' MODULAR CLASSROOMS AT HORACE MANN ELEMENTARY SCHOOL

2710 NILES ST, BAKERSFIELD, CA 93306

FOR

BAKERSFIELD CITY SCHOOL DISTRICT

BAKERSFIELD, KERN COUNTY, CALIFORNIA

IDENTIFICATION STAMP
DIV. OF THE STATE ARCHITECT
OFFICE OF REGULATION SERVICES
APPL: 03-118412
FILE: 15-6
AC ___ FLS ___ SS ___
DATE: SEP 06 2017
PTN : 63321-285

SCARCHITECT INC.
1601 NEW STINE ROAD, SUITE 280
BAKERSFIELD, CA 93309
PH: (661) 397-4377
FAX: (661) 397-4378
WWW.SCARCHITECT.COM

LICENSED ARCHITECT STEPHEN J. COMBIN STATE OF CALIFORNIA

STEPHEN J. COMBIN, NCARB, AIA, LEED AP BD+C

REGISTERED PROFESSIONAL ENGINEER CHRISTOPHER W. ROSE No. E-15635 Exp. 6/30/19 ELECTRICAL STATE OF CALIFORNIA

Rose Sing and Associates, Inc.
Electrical Consultants
131 S. Dunworth – (559)733-2671
Visalia, California 93292-6705

ONE LINE DIAGRAM, DETAILS AND PANEL SCHEDULES

JOB NO.	1244
DRAWN :	CJ
CHECKED :	
DATE :	09/01/17

4.1 OF SHEETS

AURORA

RELOCATABLE CLASSROOM BUILDING

24 x 40

(STOCKPILE)

ELITE MODULAR
EML # T.B.D.
BAKERSFIELD S.D.
RELOCATION PACKAGE FROM STOCKPILE TO
SITE SPECIFIC FOR :
HORACE MANN : (X2) 24X40 L.H. DOOR
SN'S :19433-34 / 19469-70
~~HORT: (X4) 24X40 R.H. DOOR~~
~~SN'S :19449-50/19563-64/19955-56/19959-60~~

FIRE ALARM NOTES

NFPA 13- Automatic Sprinkler Systems,	1994 Edition
NFPA 14- Standpipes Systems,	1993 Edition
NFPA 17A- Wet Chemical Systems,	1990 Edition
NFPA 24- Private Fire Mains,	1992 Edition
(California Amended) NFPA 72- National Fire Alarm Codes,	1993 Edition
NFPA 253- Critical Radiant Flux of Floor Covering Systems,	1994 Edition
NFPA 2001- Clean Agent Fire Extinguishing Systems,	1994 Edition

APPLICABLE CODES

1995 Building Standards Administrative Code, Part 1, Title 24 C.C.R.
1995 California Building Code (CBC), Part 2, Title 24 C.C.R.; (1994 Uniform Building Code volume 1-3 and 1995 California Amendments)
1995 California Electrical Code (CEC), Part 3, Title 24 C.C.R. (1993 National Electrical Code and 1995 California Amendments)
1995 California Mechanical Code (CMC), Part 4, Title 24 C.C.R., (1994 Uniform Mechanical Code and 1995 California Amendments)
1995 California Plumbing Code (CPC), Part 5, Title 24 C.C.R.; (1994 Uniform Plumbing Code and 1995 California Amendments)
1995 California Fire Code (CFC), Part 9, Title 24 C.C.R. (1994 Uniform Fire Code and 1995 California Amendments)
1994 California Referenced Standards Code, Part 12, Title 24 C.C.R.
1990 Title 19, CCR, Public Safety, state Fire Marshal Regulations

BLDG. DATA (50 LBS STANDARD)

OCCUPANCY	E-3
TYPE OF CONSTRUCTION	V - NON RATED
WIND LOAD	70 m.p.h. EXPOSURE 'C'
FLOOR LIVE LOAD	50 lbs/sq. ft.
ROOF LIVE LOAD	20 lbs/sq. ft.
BUILDING DATA	960 sq. ft.
SYSTEM:	RIGID FRAME
MODULES:	TWO 12'x 40'
FOUNDATION:	WOOD
~~FOUNDATION: CONCRETE~~	
~~FOUNDATION: FLUSH W/ GRADE CONCRETE~~	

BLDG. DATA (50 PSF+20 LBS PARTITIONS OPTION)

OCCUPANCY	E-1
TYPE OF CONSTRUCTION	V - NON RATED
WIND LOAD	70 m.p.h. EXPOSURE 'C'
FLOOR LIVE LOAD	50 lbs/sq. ft. + 20 LBS. PARTITIONS
ROOF LIVE LOAD	20 lbs/sq. ft.
BUILDING DATA	960 sq. ft.
SYSTEM:	RIGID FRAME
MODULES:	TWO 12'x 40'
FOUNDATION:	WOOD
FOUNDATION:	CONCRETE
FOUNDATION:	FLUSH W/ GRADE CONCRETE

BLDG. DATA (100 PSF OPTION)

OCCUPANCY	E-1
TYPE OF CONSTRUCTION	V - NON RATED
WIND LOAD	70 m.p.h. EXPOSURE 'C'
FLOOR LIVE LOAD	100 lbs/sq. ft.
ROOF LIVE LOAD	20 lbs/sq. ft.
BUILDING DATA	960 sq. ft.
SYSTEM:	RIGID FRAME
MODULES:	TWO 12'x 40'
FOUNDATION:	WOOD
FOUNDATION:	CONCRETE
FOUNDATION:	FLUSH W/ GRADE CONCRETE

BLDG. DATA (125 PSF OPTION)

OCCUPANCY	E-1
TYPE OF CONSTRUCTION	V - NON RATED
WIND LOAD	70 m.p.h. EXPOSURE 'C'
FLOOR LIVE LOAD	125 lbs/sq. ft.
ROOF LIVE LOAD	20 lbs/sq. ft.
BUILDING DATA	960 sq. ft.
SYSTEM:	RIGID FRAME
MODULES:	TWO 12'x 40'
FOUNDATION:	WOOD
FOUNDATION:	CONCRETE
FOUNDATION:	FLUSH W/ GRADE CONCRETE

INDEX

INDEX FOR ALTERNATE RESTROOM FLOOR PLAN

NOTE: THESE SHEET ARE TO BE USE IF THE INTENT IS FOR A RESTROOM ALL OTHER SHEET STILL APPLY

IDENTIFICATION STAMP
DIV. OF THE STATE ARCHITECT
03 11 0012
Date SEP 06 2017

D.S.A.
REVISED
IDENTIFICATION STAMP
DIV. OF THE STATE ARCHITECT
OFFICE OF REGULATION SERVICES
PCX
DATE 3-10-98
PLS: D. KOHLESON
CS: G. HAYNES
IDENTIFICATION STAMP
DIV. OF THE STATE ARCHITECT
OFFICE OF REGULATORY SERVICES
EML 68834
DATE 4-3-96
PLS: D. KOHLESON
CS: G. HAYNES
CHECKED
REVISIONS

AURORA MODULAR INDUSTRIES
10833 Krameria Ave., Riverside, CA. 92504
Phone (909) 780-7196
Fax (909) 788-0882
RELOCATABLE BUILDING FOR:
WILLIAMS/SCOTSMAN GROUP

COVER SHEET, SHEET INDEX, BUILDING DATA

SHEET 0

3767

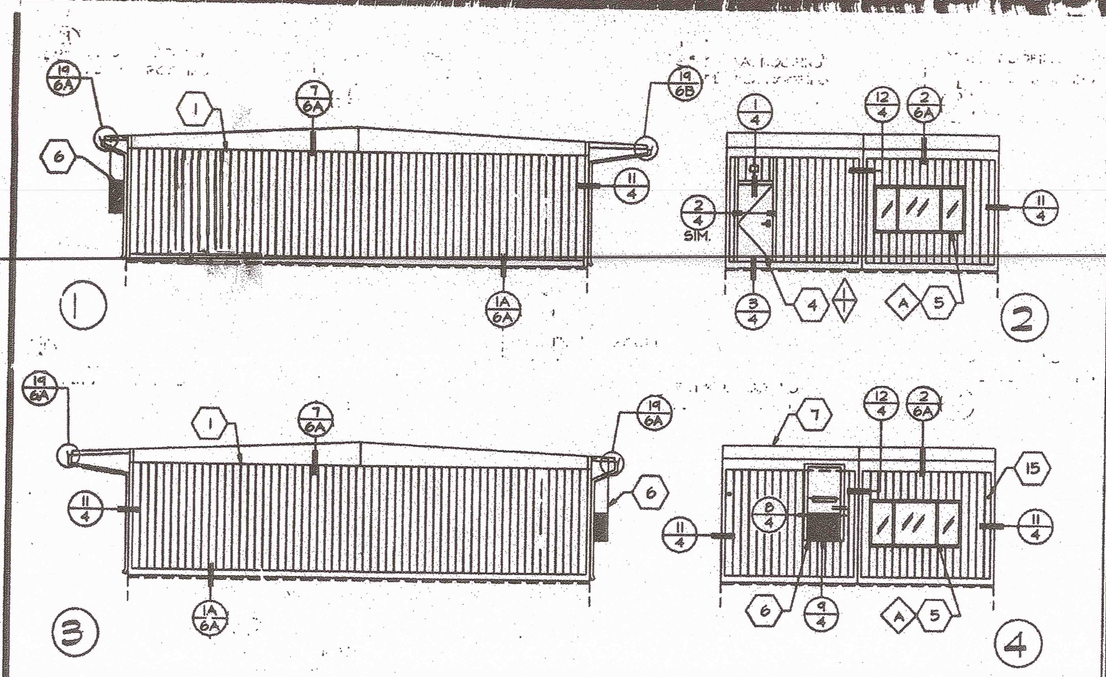

EXTERIOR ELEVATIONS
SCALE: 1/8" = 1'-0"

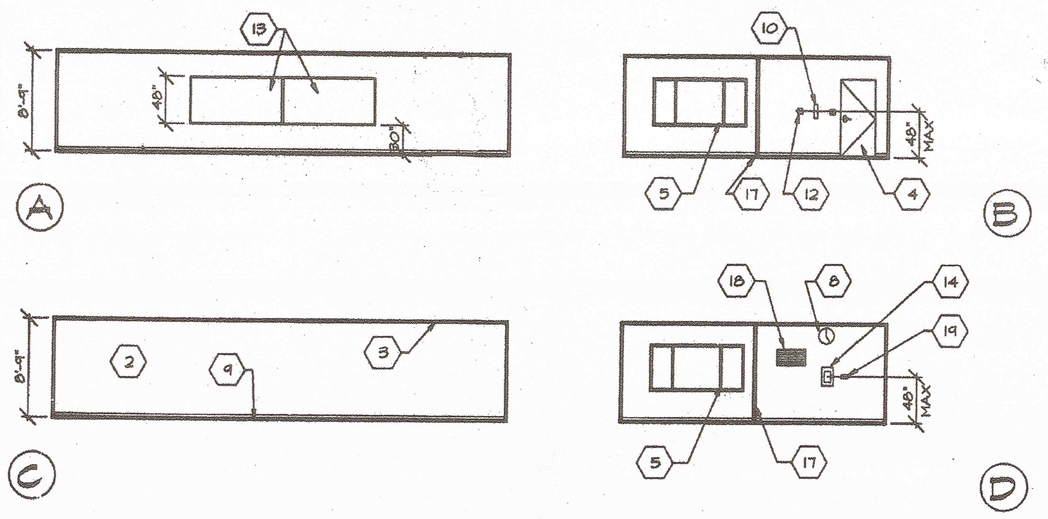

INTERIOR ELEVATIONS
SCALE 1/8" = 1'-0"

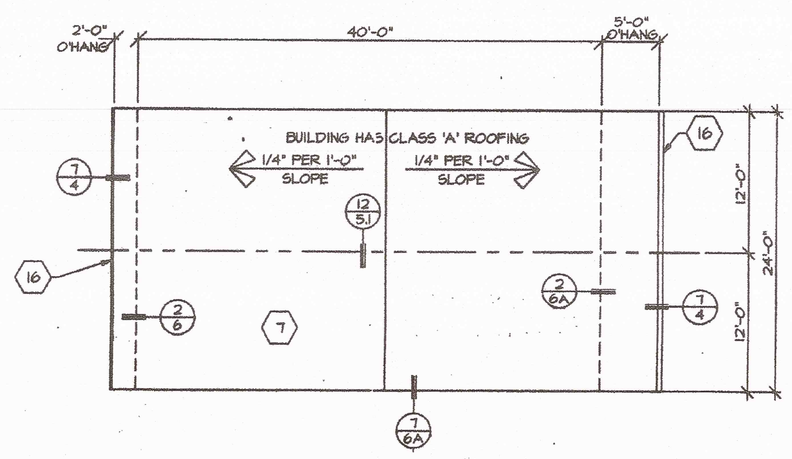

ROOF PLAN
SCALE: 1/8" = 1'-0"

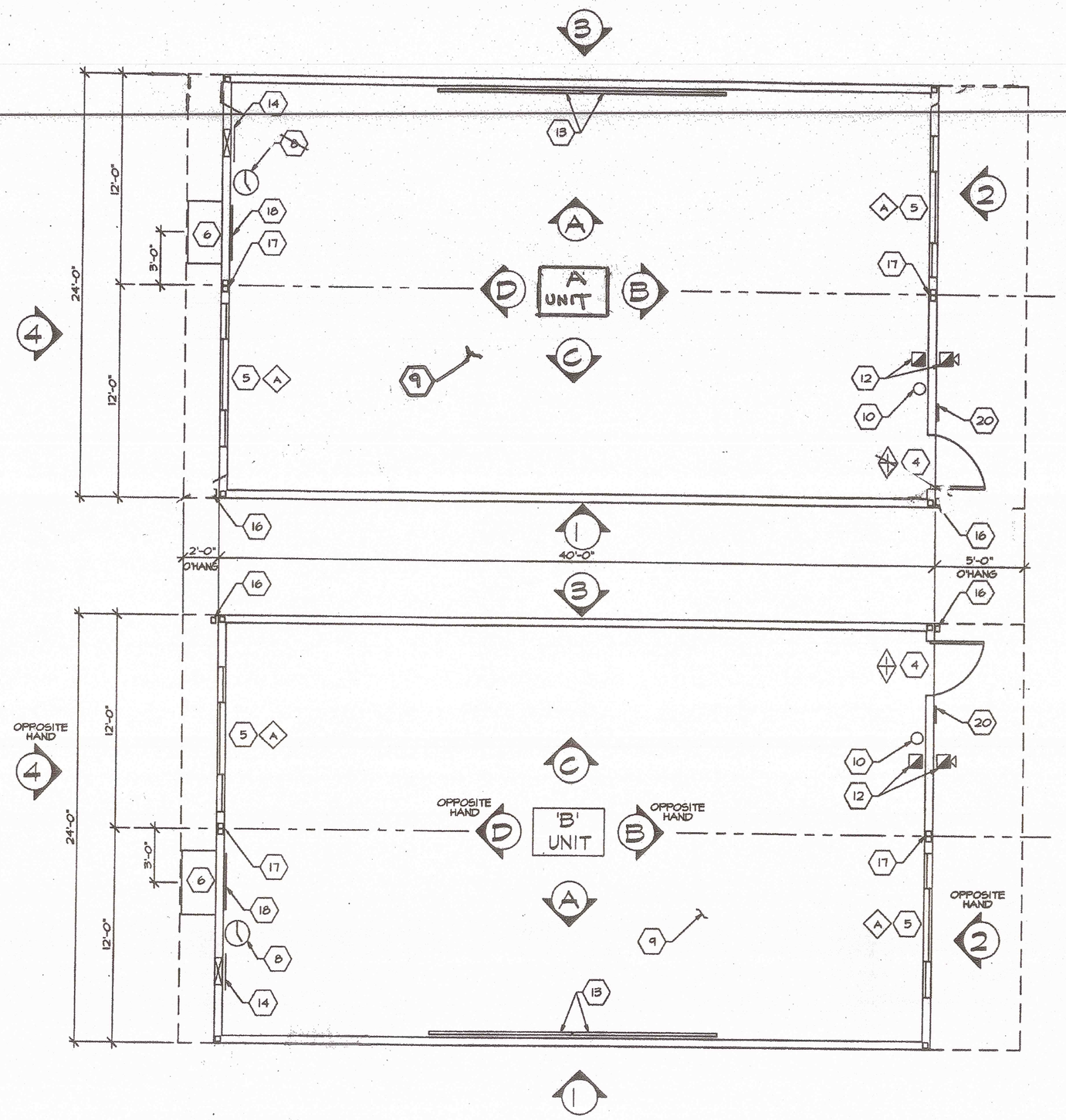

UNIT "A" (AS SHOWN) BLDGS. @ HORACE MANN (L.H. DOOR)
SN's: 19433-34 / 19469-70

UNIT "B" (OPPOSITE) BLDGS. @ HORT (R.H. DOOR)
SN's: 19449-50 / 19563-64 / 19955-56 / 19959-60

FLOOR PLANS
SCALE: 1/4" = 1'-0"

KEYNOTES

1. TYPICAL EXTERIOR FINISH- SEE SHEET 9
2. TYPICAL INTERIOR FINISH- SEE SHEET 9
3. TYPICAL CEILING MATERIAL- SEE SHEET 9
4. EXTERIOR DOOR- SEE SHEET 9
5. ALUMINUM SLIDER WINDOW- SEE SHEET 9
6. WALL MOUNTED ELECTRIC HEAT PUMP, SEE SHEET 9.
7. ROOFING- SEE SHEETS 5 & 9
8. WALL CLOCK, SEE SHEET 8.
9. FINISH FLOORING- SEE SHEET 9
10. FIRE EXTINGUISHER- 5 lb DRY CHEMICAL WITH 2A-10B-C UL RATING. MOUNTING BRACKET @ 48" A.F.F.
11. INSULATION- FIBERGLASS BATTS, R-19 IN ROOF, R-11 IN WALLS, AND R-11 IN FLOOR; FLAME SPREAD-0-25, SMOKE DEVELOPED, FUEL CONTRIBUTED- 0-450.
12. FIRE ALARM- PULL STATION LOCATED @ 4'-0" ON THE INTERIOR, HORN OR BELL LOCATED AT 8'-6" ON THE EXTERIOR, CONDUIT TO BE STUBBED INTO ATTIC SPACE ONLY.
13. CHALKBOARD - SEE SHEET 9.
14. ELECTRICAL PANEL 'A'- SEE SHEET 8.
15. METAL TAG ON ALL MODULES MECHANICALLY ATTACHED TO EXTERIOR OF REAR FRAME, AT 8'-0" A.F.F. SHOWING DSA APPROVAL NUMBER, MANUFACTURES NAME, FLOOR LOAD, WIND LOAD AND UNIT SERIAL NUMBER.
16. 26 GA. GUTTER AND DOWNSPOUT.
17. VINYL WRAPPED CLOSE-OFF BATT.
18. HVAC RETURN.
19. THERMOSTAT, SEE SHEET 8.
20. ACCESS SIGN (SEE DETAIL 16 SHEET 4)

KEYNOTES
TYPE DOOR HARDWARE
WINDOW TYPE
DETAIL #
SHEET #

D.S.A.
REVISED
IDENTIFICATION STAMP
DIV. OF THE STATE ARCHITECT
OFFICE OF REGULATION SERVICES
PC 253
AC FLS SS
DATE 9-3-96
65039
9-3-96
IDENTIFICATION STAMP
DIV. OF THE STATE ARCHITECT
03 110412
AC FLS SS TB
Date SEP 0 6 2017

CHECKED

REVISIONS

LICENSE EXPIRES 6-30-1998

16833 Krameria Ave., Riverside, CA. 92504
Phone (909) 789-7196
Fax (909) 788-0263
AURORA MODULAR INDUSTRIES

RELOCATABLE BUILDING FOR:
WILLIAMS/SCOTSMAN GROUP

FLOOR PLAN
ROOF PLAN
BUILDING ELEVATIONS

BY: JEG DATE: 9-3-96
SHEET
3767
CAD FILE NO.: PC253-1.DWG

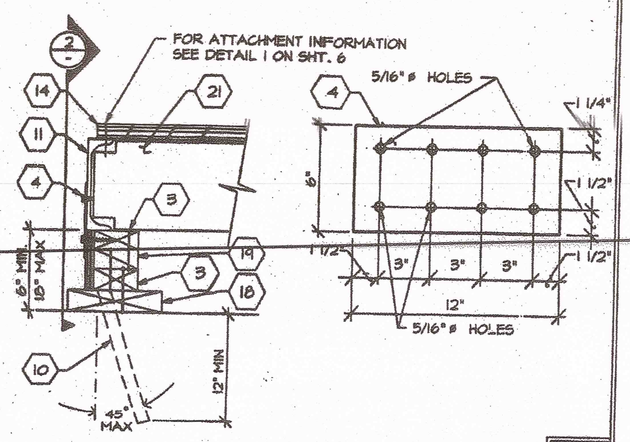

FOUNDATION AT SIDEWALL 1

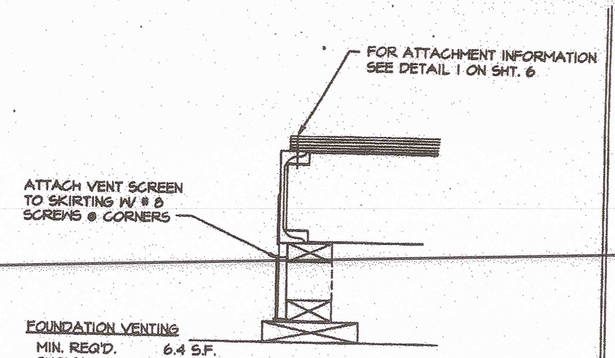

FOUNDATION VENTING

MIN. REQ'D. 6.4 S.F.
SHOWN 8.5 S.F.
(24 - 3"x17" VENTS)

FOUNDATION VENTING 5

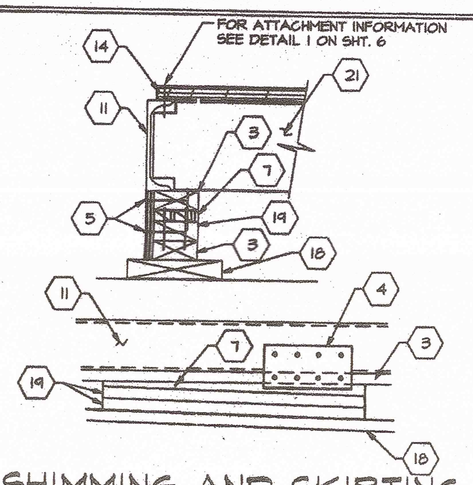

SHIMMING AND SKIRTING (SIDEWALL SHOWN) 2

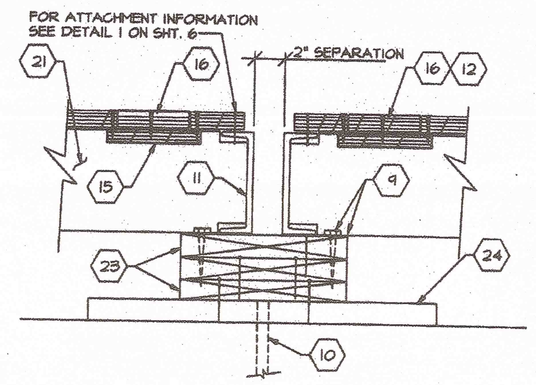

COMMON PAD 6

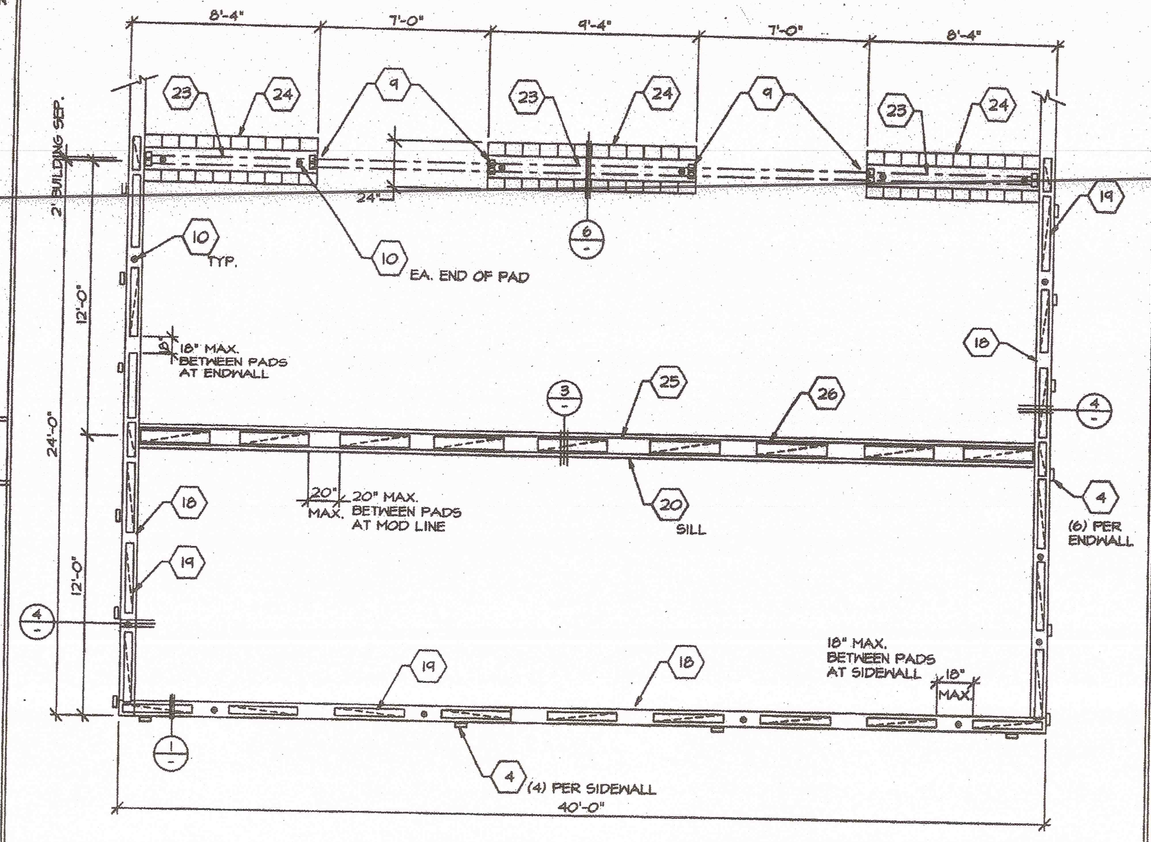

FOUNDATION PLAN @ ADJACENT BLD'G

SCALE: 1/4" = 1'-0" (50 PSF LIVE LOAD)

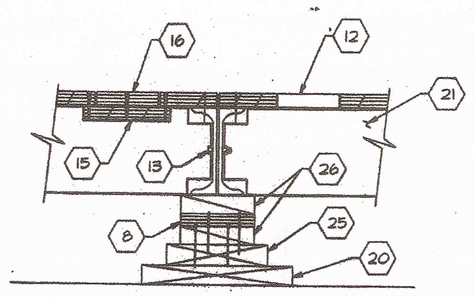

FOUNDATION AT MOD LINE 3

7

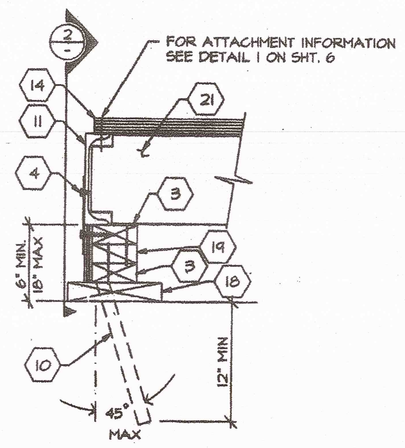

FOUNDATION AT ENDWALL 4

8

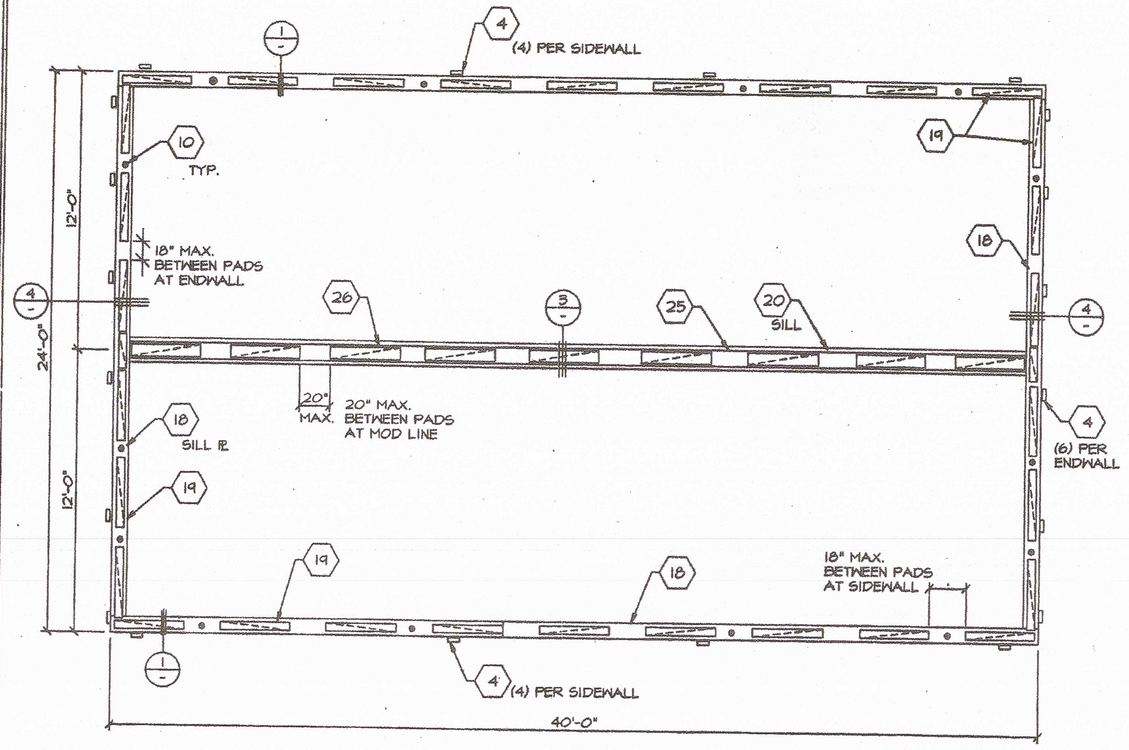

FOUNDATION PLAN

SCALE: 1/4" = 1'-0" (50 PSF LIVE LOAD)

KEYNOTES

1 MAXIMUM SOIL BEARING PRESSURE - 1000 P.S.F.

2 ALL FOUNDATION LUMBER SHALL BE HEM FIR #2
ALL LUMBER IN CONTACT WITH GRADE SHALL BE STAMPED ~~"FOR GROUND CONTACT"~~.

ALL FOUNDATION NAILS SHALL BE CORROSION RESISTANT PER U.B.C. STANDARD 25.1717.

3 2x4x CONTINUOUS. INTERNAIL TO EACH PAD WITH 16d BOX NAILS @ 5" O.C. STAGGERED.

4 TIE PLATE - 12"x 6"x 10ga. PLATE W/ (8) 5/16" HOLES AS SHOWN FOR (4) 1/4"x 3/4" LONG SELF TAP SCREWS INTO CHANNEL & (4) 1/4"x 3" LAG BOLTS.

5 5/8" PLYWOOD PERIMETER SKIRTING. NAIL TO FOUNDATION PADS WITH 8d BOX NAILS @ 12" O.C. TOP AND BOTTOM.

6 NOT USED.

7 TAPERED SHIMS - NAIL TO FOUNDATION PADS WITH 16d BOX NAILS @ 12" O.C. NAIL 2X12 FOUNDATION PLATE TO TAPERED SHIMS WITH 16d BOX NAILS @ 12" O.C. STAGGERED ALONG EACH TAPERED SHIM.

8 PLYWOOD OR WOOD SHIM - MIN. 8" LONG, MAX. 16" BETWEEN SHIMS. NAIL TO PLATES WITH MIN (3) 16d BOX NAILS PER SHIM. MAX. 1-1/2" SHIM HEIGHT AT ANY LOCATION.

9 1/16" HOLE FOR 5/8"x4" LAG BOLT IN PURLIN PURLIN AT 4'-0' O.C. (12 TOTAL)

10 DRIVE 1" DIA. x 15" G.I. PIPE @ 10'-0" O.C. MAX. DRILL SILL PLATE 1-1/4" MAX. PIPE MAY BE DRIVEN AT MAX. 45 ANGLE TO VERTICAL.

11 STEEL FLOOR CHANNEL.

12 5" DIA. ACCESS HOLE AT MODULE CONNECTION BOLT LOCATIONS.

13 5/8" MACHINE BOLT @ MODULE CONNECTION. SEE SHT. 5 'STRUCTURAL SIDE' FOR LOCATIONS.

14 PLYWOOD FLOOR DECK. ATTACH PLY'WD. FLOORING TO STEEL CHANNEL WITH #10x1 1/2" S.T.S. - SEE SHEET 6 DETAIL 1

15 PLYWOOD STRIP - 3/4"x 3"x 8" PIECE W/ (2) #12x 2-1/4" FLAT HEAD WOOD SCREWS EACH END.

16 PLUG - 5" DIA. PIECE OF FLOOR SHEATHING W/ (2) #12x2-1/4" FLAT HEAD WOOD SCREWS EACH END.

17 NOT USED

18 CONTINUOUS 2x8 P.T.H.F. SILL PLATE. PLATE SPLICES SHALL OCCUR AT CENTER OF 2x4 BLOCK LOCATIONS.

19 2x4x 3'-0" LONG BLOCKS. NAIL BLOCKS TOGETHER WITH 16d BOX NAILS @ 4" O.C. AND (2) 16d NAILS AT EACH END.

20 CONTINUOUS 2x12 P.T.H.F. SILL PLATE. PLATE SPLICES SHALL OCCUR AT CENTER OF 2x8 BLOCK LOCATIONS.

21 FLOOR JOIST OR BLOCK BETWEEN FLOOR JOIST.

22 NOT USED

23 CONTINUOUS 2x12x(SEE PLAN) - NAIL (2) 16d AT EACH END AND 12" O.C.

24 2x10x24" LONG SILL PADS. P.T.H.F. (SEE PLAN FOR QUANTITY 10 AT ENDS AND 12 AT INTERIOR)

25 CONTINUOUS 2x8 H.F. PLATE. PLATE SPLICES SHALL OCCUR AT CENTER OF 2x6 BLOCK LOCATIONS.

26 2x6x 3'-0" LONG BLOCKS. NAIL BLOCKS TOGETHER WITH 16d BOX NAILS @ 4" O.C. AND (2) 16d NAILS AT EACH END.

D.S.A.

REVISED

IDENTIFICATION STAMP DIV. OF THE STATE ARCHITECT OFFICE OF REGULATION SERVICES
PC 253
AC FLS SS
DATE 5-10-96

APPL 65899
4-23-96

IDENTIFICATION STAMP DIV. OF THE STATE ARCHITECT
03 118412
AC FLS SS TB
DATE SEP 06 2017

CHECKED

REVISIONS

LICENSE EXPIRES

16833 Krameria Ave., Riverside, CA. 92504
Phone (909) 789-7196
Fax (909) 789-0263
AURORA MODULAR INDUSTRIES

RELOCATABLE BUILDING FOR:
WILLIAMS/SCOTSMAN GROUP

FOUNDATION PLAN & DETAILS

(WOOD 50 LBS. LIVE LOAD)

BY JEG DATE 9-3-96

SHEET 2A

3767

C.A.D. FILE NO. PC253-2A.DWG

File: H:\PC_253\PC253-2A.DWG Last edited: MAY 06, 96 @ 10:28 a.m. by: ??

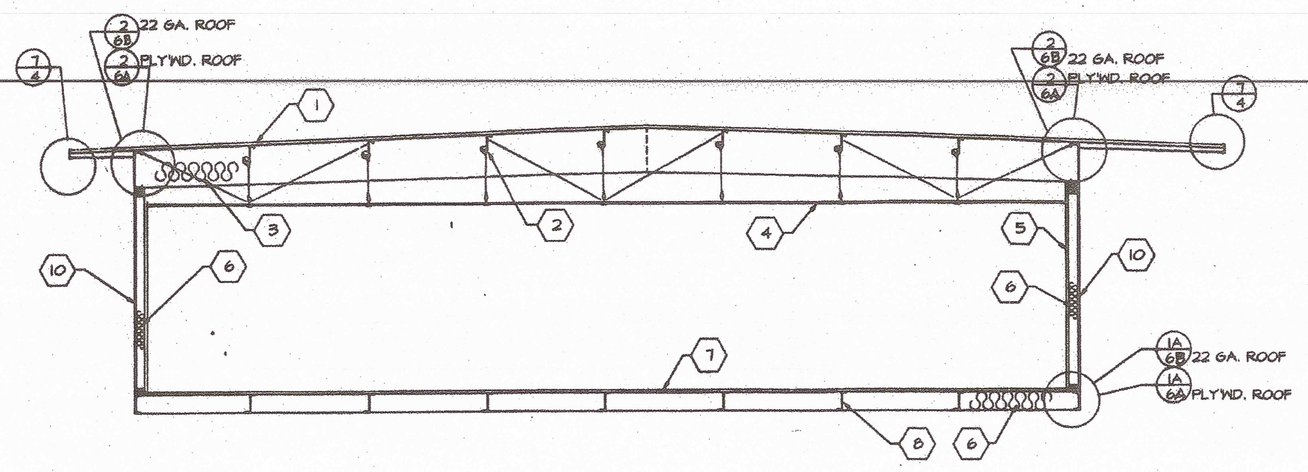

BUILDING SECTIONS

SCALE: 1/4" = 1'-0"

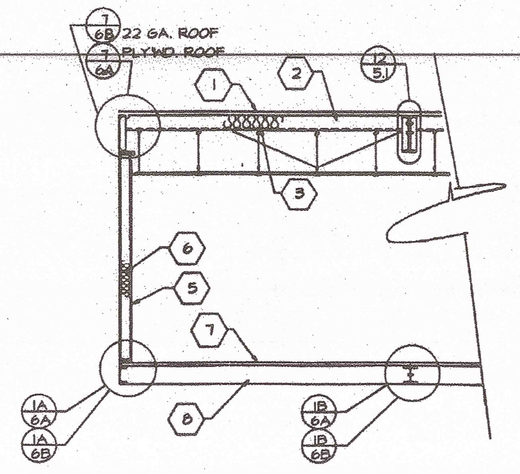

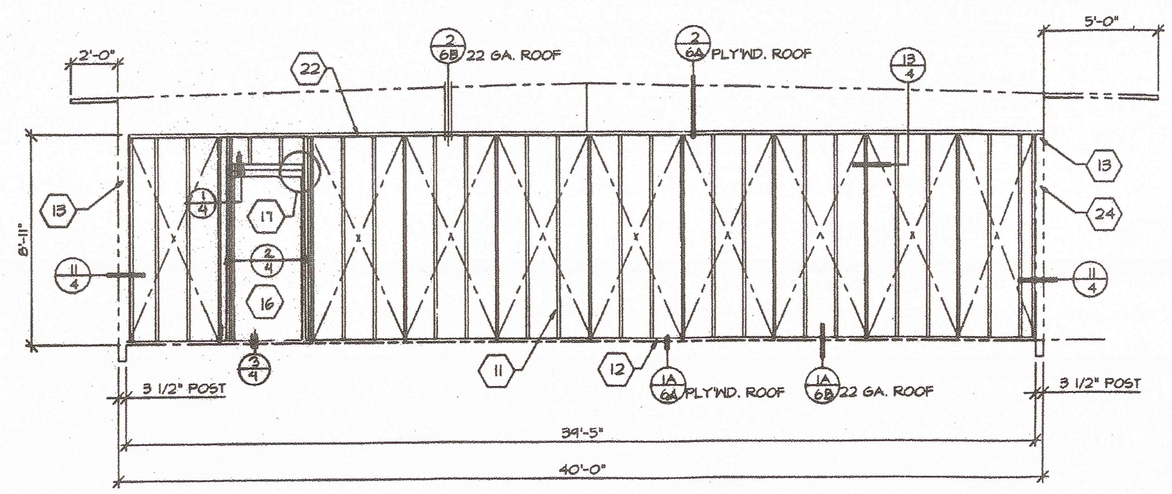

WALL 2 SHOWN WITH NO OPENING

WALL 1 OPP. HAND

TYPICAL SIDEWALL

SCALE: 1/4" = 1'-0"

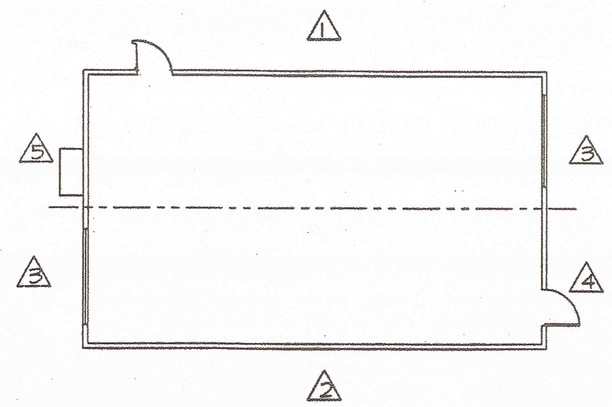

WALL LOCATIONS

SCALE: 1/8"=1'-0"

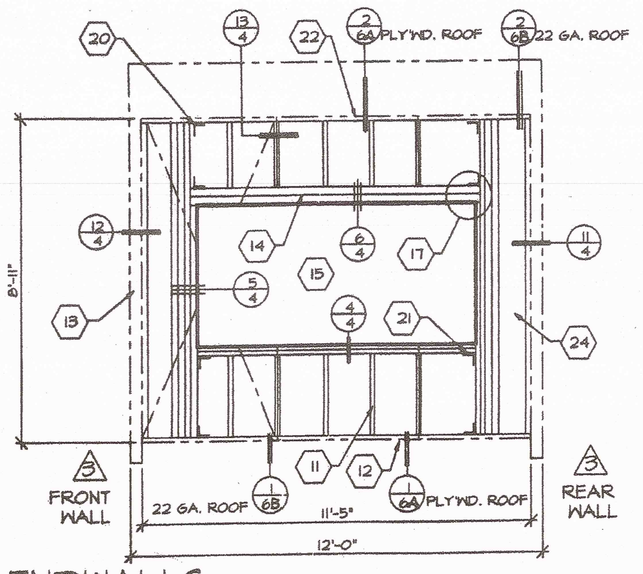

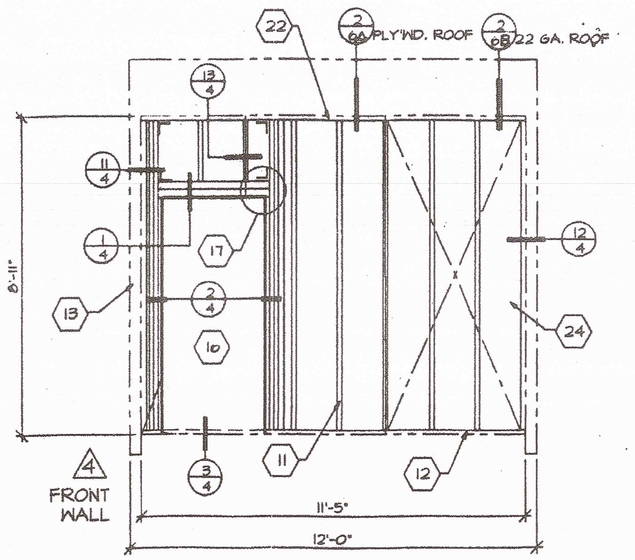

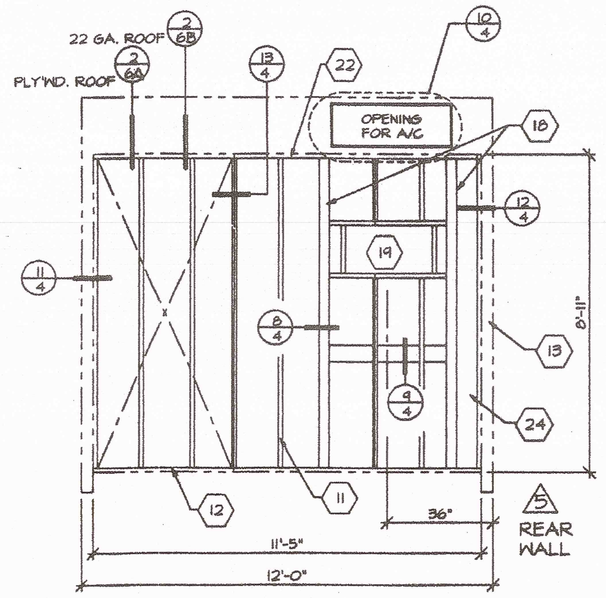

TYPICAL ENDWALLS

SCALE 3/8"=1'-0"

KEYNOTES

1 ROOF SHEATHING- SEE SHEET 9

2 STEEL ROOF JOIST- SEE SHEET 5

3 R-19 FIBERGLASS INSULATION ON METAL STRAPS. FLAME SPREAD; 25 OR LESS. SMOKE DENSITY 450 OR LESS.

4 SUSPENDED CEILING- SEE SHEET 7.

5 ~~TYPICAL INTERIOR FINISH- SEE SHEET 9~~

6 R-11 FIBERGLASS INSULATION. FLAME SPREAD; 25 OR LESS SMOKE DENSITY; 450 OR LESS

7 PLYWOOD FLOOR SHEATHING- SEE SHEET 5

8 STEEL FLOOR JOIST- SEE SHEET 5

9 NOT USED

10 PLYWOOD SIDING/SHEATHING- SEE SHEET 9 FOR MATERIAL. NAIL SIDING WITH CORROSION RESISTANT 8d BOX NAILS @ 6" BOUNDARY & EDGES, 12" FIELD.

11 STUDS- 2x4 H.F. STUD GRADE @ 16" O.C.

12 BOTTOM PLATE- 2x4 H.F. STD & BETTER.

13 STEEL FRAME- SEE SHEET 5 "STRUCTURAL ELEVATIONS" FOR MEMBER TYPES AND SIZES.

14 WINDOW HEADER- (3) 2x4 D.F. #1 FLAT.

15 FRAME FOR 8'-0"x 4'-0", WINDOW: USE (3) FULL HEIGHT HEM FIR 2x4 STUDS W/1- 2x4 2x4 TRIMMER BOTH SIDES AND (2) 2x4 FLAT FOR WINDOW SILL.

16 FRAME FOR 3'-0"x 6'-8" DOOR. USE (3) FULL HEIGHT 2x4 JAMB STUDS WITH (1) 2x4 TRIMMER BOTH SIDES, & (2) 2x4 FOR HEADER. SEE DETAIL 1 SHEET 4

17 NAIL THRU VERTICAL STUD INTO HORZ. HEAD OR SILL W/ MIN. (4) 16d NAILS PER CONNECTION. TYPICAL AT CORNERS OF ALL OPENINGS.

18 4x4 D.F. POST

19 SEE SHEET 9 FOR A/C SIZE AND TONAGE.

20 'SIMPSON' A35 CLIPS (4) PLACES TO TOP AND BOTTOM PLATES.

21 'SIMPSON' A35 CLIPS (4) PLACES TO WINDOW SILL AND HEADER OR (2) PLACES TO DOOR HEADER.

22 2x4 PLATE- H.F. STD.&RD.OR BETTER.

23 FIRE BLOCKING PER SEC. 708, 1994 C.B.C.

D.S.A.

REVISED

IDENTIFICATION STAMP DIV. OF THE STATE ARCHITECT OFFICE OF REGULATION SERVICES PC 253 AC FLS SS DSA DATE 5-20-96

DSA 65839 6n 9-3-96

IDENTIFICATION STAMP DIV. OF THE STATE ARCHITECT 03 110412 AC FLS SS TB Date SEP 06 2017

CHECKED

REVISIONS

LICENSED PROFESSIONAL ENGINEER STATE OF CALIFORNIA LICENSE EXPIRES 6-30-1993

16533 Krameria Ave., Riverside, CA. 92504
Phone (909) 789-7196
Fax (909) 789-0263
AURORA MODULAR INDUSTRIES

RELOCATABLE BUILDING FOR:
WILLIAMS/SCOTSMAN GROUP

BUILDING SECTIONS, WALL FRAMING

BY JEG DATE 7-3-96

SHEET 3

3767

CAD FILE NO. PC253-3.DWG

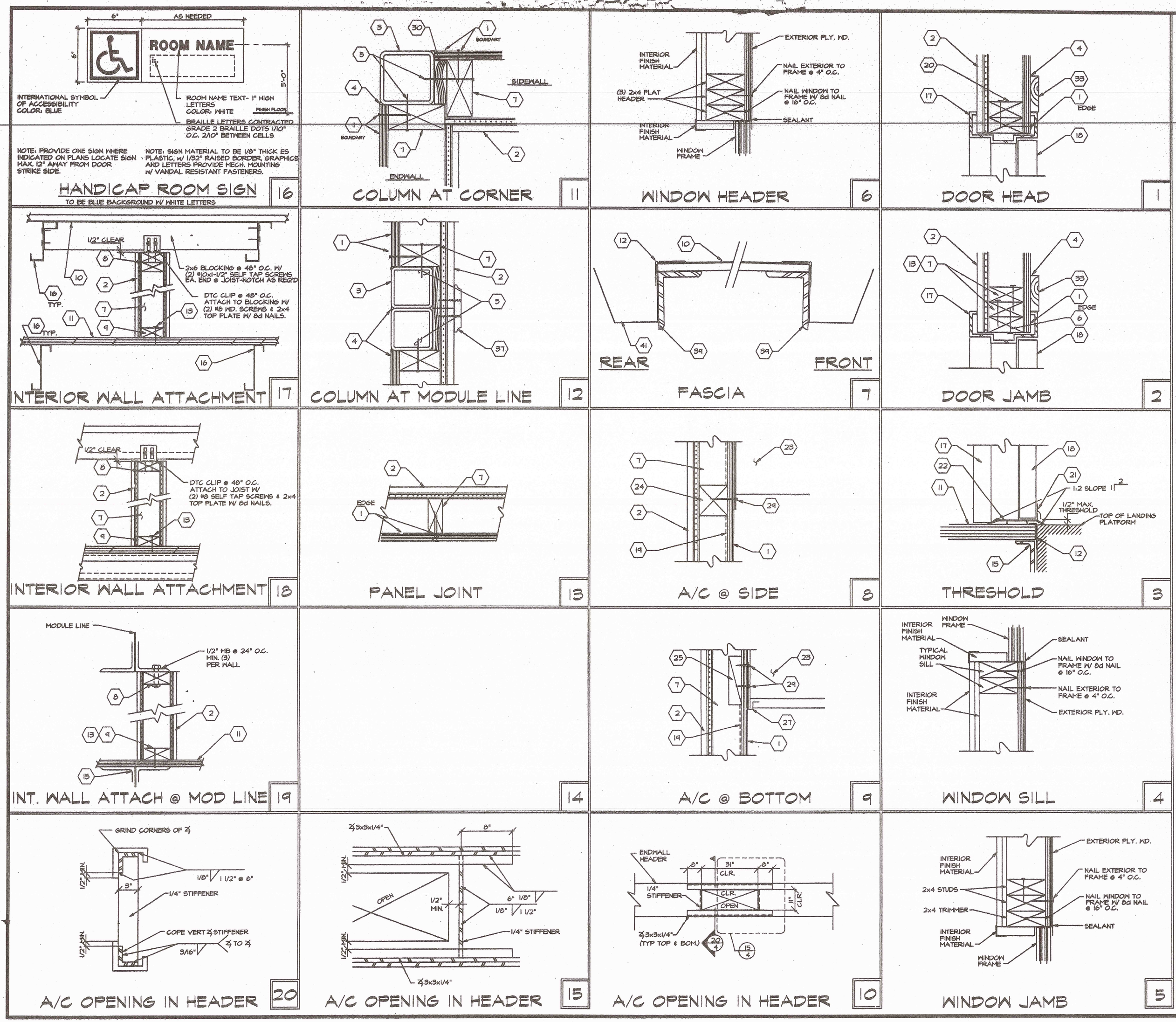

KEYNOTES

1. EXTERIOR PLYWOOD SIDING/SHEATHING - NAIL W/ CORROSION RESISTANT 8d BOX NAILS @ 6" O.C. BOUNDARY & EDGES, AND 12" O.C. FIELD. WITH MOISTURE BARRIER SEE SHEET 9 FOR MATERIAL.
2. TYPICAL INTERIOR FINISH - SEE SHEET 9 FOR MATERIAL
3. STEEL TUBE COLUMN - SEE SHEET 5
4. SEALANT
5. 'HILTI' DN57-P8 OR 'RAMSET' 1514 SD @ 24" O.C.
6. 2x4 TRIMMER
7. 2x4 FULL HEIGHT STUDS
8. 2x4 TOP PLATE
9. 2x4 BOTTOM PLATE
10. ROOF SHEATHING - SEE SHEET 5.
11. FLOOR SHEATHING - SEE SHEET 5.
12. GALVANIZED METAL FLASHING
13. 16d BOX NAILS @ 16" O.C.
14. NOT USED
15. STEEL FLOOR CHANNEL - SEE SHEET 5
16. STEEL JOIST - SEE SHEET 5
17. HOLLOW METAL DOOR FRAME
18. METAL DOOR
19. NOT USED
20. HEADER - (2) 2x4 # 1 FLAT
21. DOOR BOTTOM WITH WEATHER STRIP
22. ALUMINUM THRESHOLD
23. WALL MOUNTED A/C
24. 4x4 D.F # 2 & BETTER POST
25. 2x6 BLOCK BETWEEN STUDS. ATTACH TO STUDS W/ (2) 16d BOX NAILS EACH END OF BLOCKS INTO STUD
26. NOT USED.
27. 11 6a x 24" LONG STEEL BOTTOM BRACKET
28. NOT USED.
29. 3/8" DIA. x 2-1/2" LAG BOLTS, QNTY AS INDICATED BY PRE DRILLED HOLES ON UNIT.
30. 3/4" x SPACER
31. NOT USED
32. NOT USED
33. 1x4 TRIM
34. NOT USED
35. NOT USED
36. NOT USED
37. VINYL WRAPPED CLOSE OFF BATT. ATTACH W/ #8x 2-1/4" PAN HEAD WOOD SCREWS STAGGERED 24" O.C. & (2) SCREWS TOP AND BOTTOM.
38. NOT USED
39. 4 4"x 3"x 3/8" @ PERIM. OF OVERHANG.
40. NOT USED
41. 26 Ga GUTTER - SEE ROOF PLAN FOR LOCATION

D.S.A.

REVISED

IDENTIFICATION STAMP DIV. OF THE STATE ARCHITECT OFFICE OF REGULATION SERVICES

PC 853

AC FLS SS

DATE 10-10-96

MK 65839

9-23-96

IDENTIFICATION STAMP DIV. OF THE STATE ARCHITECT

03 110412

AC FLS SS

Date SEP 08 2017

CHECKED

REVISIONS

LICENSE EXPIRES 6-30-10

16833 Krameria Ave., Riverside, Ca. 92504
Phone (909) 780-7106
Fax (909) 789-0253

AURORA MODULAR INDUSTRIES

RELOCATABLE BUILDING FOR:
WILLIAMS/SCOTSMAN GROUP

TYPICAL DETAILS

BY JEG DATE 9-3-96

SHEET 4

3767

CAD FILE NO. PC253-4.DWG

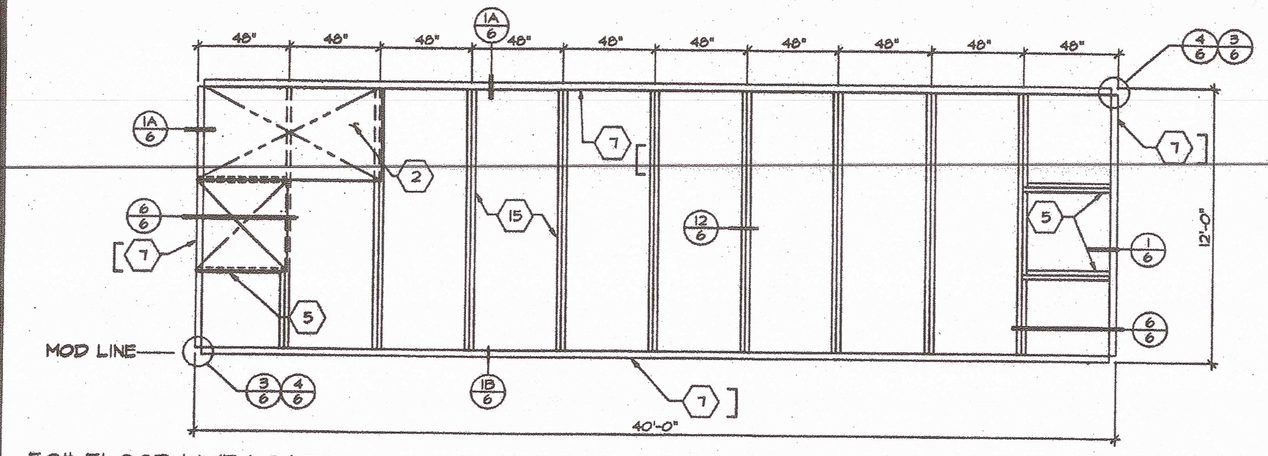

50# FLOOR LIVE LOAD

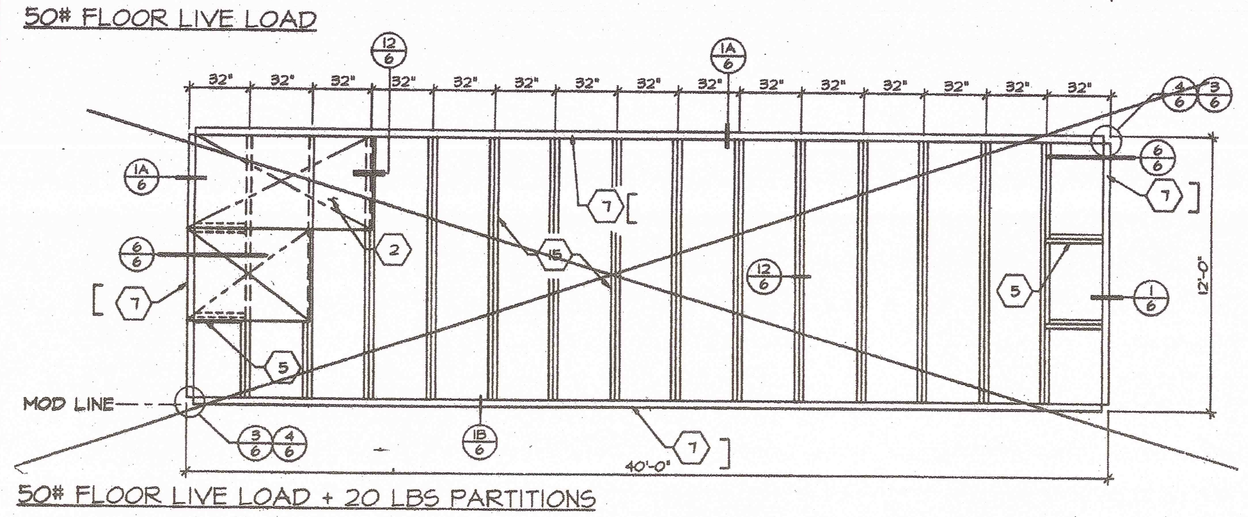

50# FLOOR LIVE LOAD + 20 LBS PARTITIONS

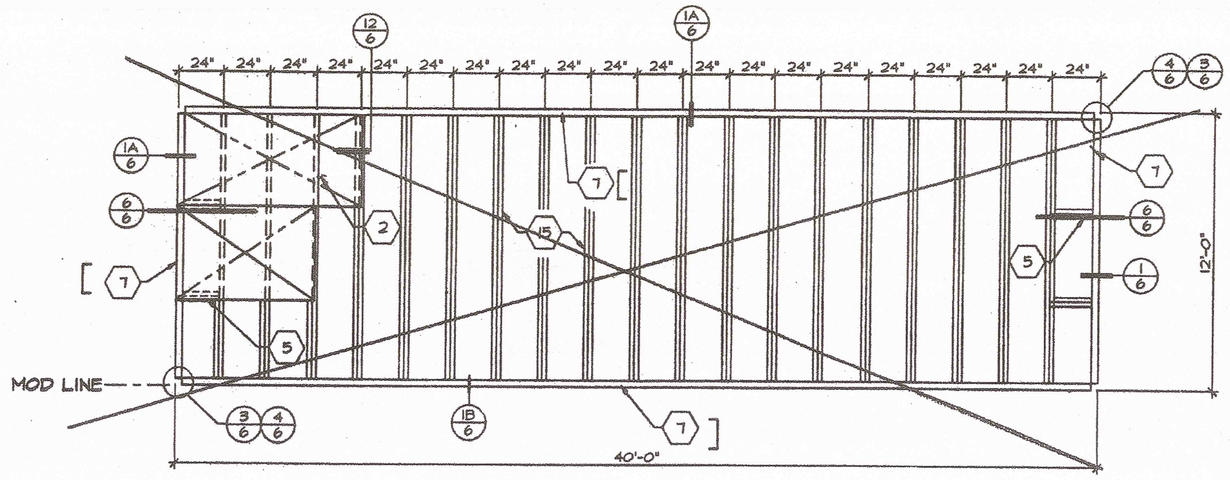

100# FLOOR LIVE LOAD

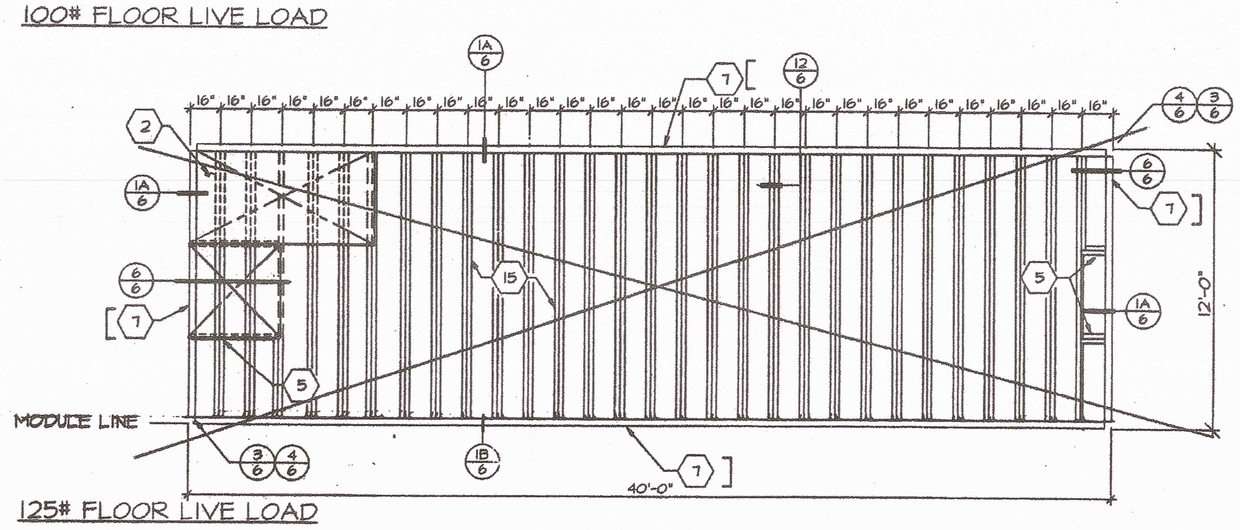

125# FLOOR LIVE LOAD

FLOOR FRAMING

SCALE 1/4" - 1'-0"

KEYNOTES

1 STEEL ROOF DECK - 22 Ga. ROLL FORMED DECK WITH 3"STANDING SEAM. SEE NOTE 1 SHT 6A FOR ATTACH

2 PLYWOOD FLOOR SHEATHING - 1 1/8" A.P.A. STURD-I-FLOOR, T & G, P.S. 1-83. SEE NOTE 2 SHT.6A OR 6B FOR ATTACH.

3 [18/23/18x3 1/2"x10 Ga.

4 [18"x3 1/2x12 Ga. RFC STEEL ROOF HEADER.

5 ⅃ 7"x 11 Ga. STEEL BLOCK @ 48" O.C.

6 NOT USED

7 [7"x 9.8 LB PERIMETER FLOOR FRAME.

8 ⅃ 6"x 14 Ga. STEEL ROOF JOIST @ 48" O.C.

9 STEEL COLUMN - 3 1/2"x3 1/2"x3/16" TUBE.

10 NOT USED

11 WELD WASHER FOR CEILING GRID - TYP. BOTH SIDES SEE DETAIL 15:6.

12 STRAP TACKED TO UNDERSIDE OF JOIST @ 24" O.C. FOR INSULATION SUPPORT.

13 3/16" FULL HEIGHT STIFFENER AT PURLIN LOCATIONS.

14 2"x 20 Ga. STRAPS W/ 3" MIN. 1/8" FILLET WELD EACH END TO ROOF BEAM/HEADER TYP.

15 ⅃ 7"x 11 Ga. STEEL FLOOR JOIST @ SEE FRAMING PLAN FOR FLOOR JOIST SPACING

16 PLYWOOD ROOF SHEATHING 3/4" C-D INT WITH EXT. GLUE 48/24 INDEX, P.S. 1-74 SQUARE EDGE WITH PLYWOOD CLIPS @ 16" O.C. LONG EDGES.

17 1 1/2"x1 1/2"x3/16" BRACE (SEE SHT. 5.1 DET 10)

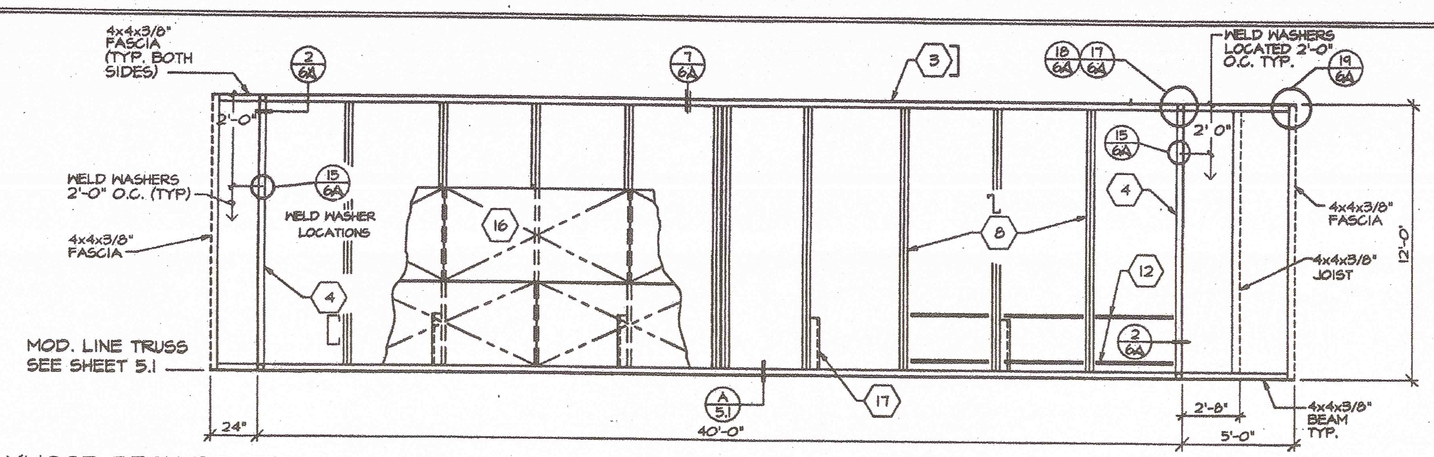

PLYWOOD DECK ROOFING

SEE SHEET 6A OR 6C

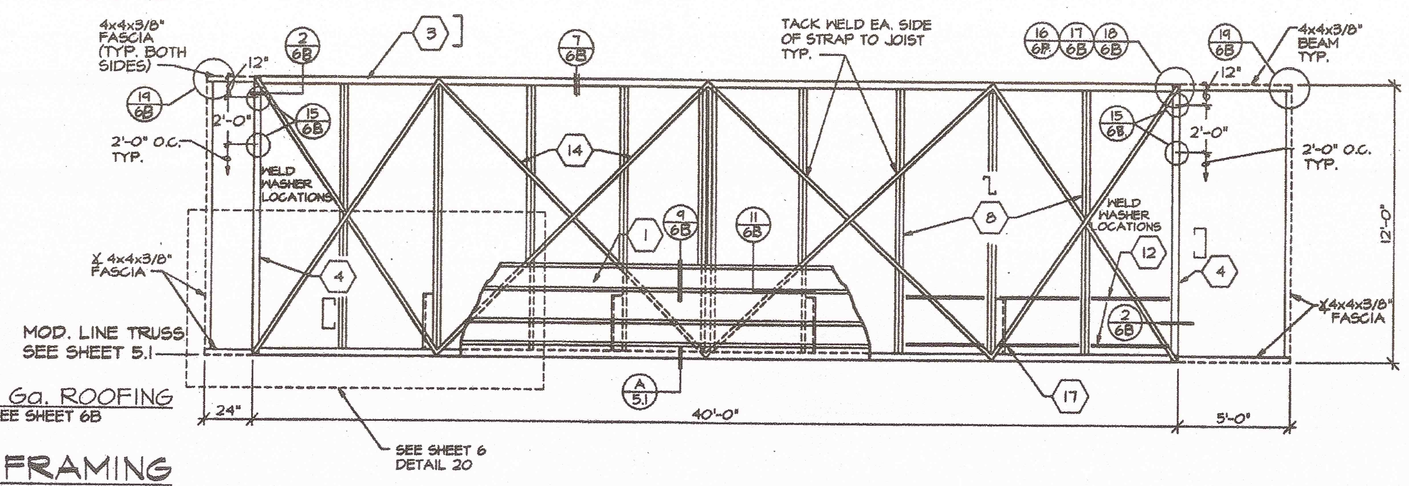

ROOF FRAMING

SCALE 1/4" - 1'-0"

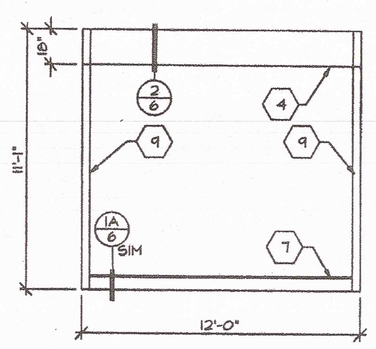

TYPICAL ENDWALL

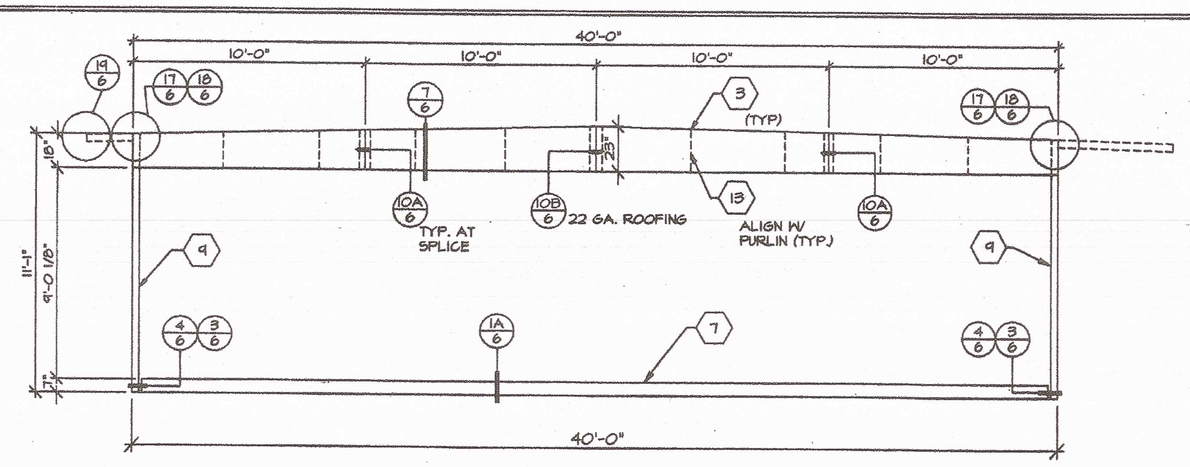

OUTSIDE ELEVATION

STRUCTURAL ELEVATION

SCALE 1/4" - 1'-0"

D.S.A.

REVISED

IDENTIFICATION STAMP DIV. OF THE STATE ARCHITECT OFFICE OF REGULATION SERVICES

PC 853

AC FLS SS

DATE 5-10-96

IDENTIFICATION STAMP DIV. OF THE STATE ARCHITECT

03 110412

AC FLS SS TB

Date SEP 06 2017

CHECKED

REVISIONS

LICENSE EXPIRES 6-30-1997

16833 Kramoria Ave., Riverside, CA. 92504
Phone (909) 789-7196
Fax (909) 789-0253
AURORA MODULAR INDUSTRIES

RELOCATABLE BUILDING FOR:
WILLIAMS/SCOTSMAN GROUP

FLOOR FRAMING, ROOF FRAMING, STRUCTURAL ELEVATIONS

BY SEG DATE 7-3-96

SHEET

3767

C.A.D. FILE NO. PC253-5.DWG

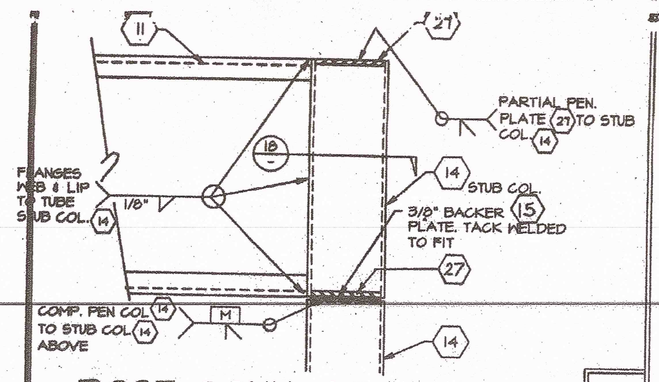

POST CONN. AT ROOF 16

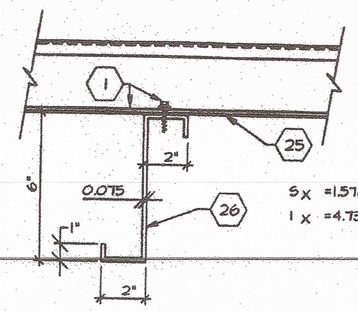

ROOF JOIST 11

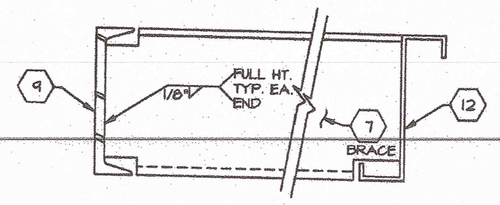

BRACE AT FLOOR 6

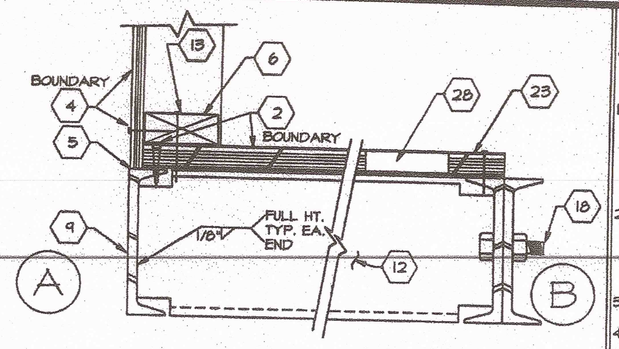

PERIMETER FLOOR 1

KEYNOTES

1. STEEL ROOF DECK - 22 Ga. ROLL FORMED 2 1/2" STANDING SEAM ROOF DECK. USE #14 SELF TAP SCREWS @ 12" O.C. AT ROOF JOIST ((2) PER PANEL), AND #14 SELF TAP SCREWS @ 4" O.C. AT HEADERS (3) PER PANEL) AND 24" O.C. @ OUTSIDE EDGE. (1) #14 STS @ 4'-0" O.C. AT STANDING SEAM BETWEEN JOIST.
2. PLYWOOD FLOOR SHEATHING - SEE NOTE 25. ATTACH PLYWOOD W/#10-24x1 3/4" SELF TAP SCREWS @ 6" O.C. BOUNDARY & EDGES AND 6" O.C. FIELD. W/ FLOOR JOIST @ 48" O.C. (JOIST SPACE UNDER 48" O.C. = 10" O.C. FIELD)
3. TYPICAL INTERIOR FINISH - SEE SHEET 9
4. TYPICAL EXTERIOR FINISH - SEE SHEET 9
5. SEALANT
6. 2 x 4 TOP OR BOTTOM PLATE
7. 7"x 11 Ga. STEEL BRACE WELDED TO PERIMETER FRAME AND FLOOR JOIST.
8. 18/23/18x 3 1/2"x10 ga. CHANNEL
9. 7"x 9.8 lb PERIMETER FRAME.
10. 4"x 4"x 1/2" STIFFENER
11. 18x 3 1/2"x126A. CHANNEL ROOF HEADER
12. 7"x 11 Ga. FLOOR JOIST.
13. 16d NAIL @ 8" O.C.
14. STEEL COLUMN - 3 1/2"x 3 1/2"x 3/16" TUBE.
15. 3/8" PLATE.
16. 3/16" FULL HEIGHT STIFFENER @ 4'-0" O.C.
17. NOT USED
18. 5/8" MACHINE BOLT @ MODULE CONNECTION - SEE SHT. 5 "STRUCTURAL SIDE" FOR ELEVATIONS.
19. 3 1/2"x 3 1/2"x 3/16"x 11 3/4" LONG TUBE AT ROOF, 3 1/2"x 3 1/2"x 3/16"x 7' LONG TUBE AT FLOOR.
20. 1/2" MACHINE BOLT W / WASHER @ 24" O.C. MIN.
21. 1/2" MACHINE BOLT @ 24" O.C. MIN.
22. CHANNEL FRAME - GRIND WELDS ON EXPOSED FACES SMOOTH.
23. AT MODULE JOINT TAKE PLYWOOD TO EDGE OF CHANNEL. AT PERIMETER, HOLD PLYWOOD BACK AS INDICATED.
24. WELD WASHER - 1-3/8"x 3/32" WITH 9/16" HOLE. WELD TO UPPER CHANNEL FLANGE.
25. 2"x 20 Ga. STRAPS W/ 3" MIN. OF 1/8" FILLET WELD EA. END TO ROOF BEAM.
26. 6"x 14 Ga. ROOF JOIST
27. 1/4" PLATE FITTED INSIDE TUBE COLUMN AND WELDED IN PLACE.
28. 5" DIA. HOLE AT BOLT LOCATION.
29. 4"x4"x3/8" ∡ @ PERIMETER OF O'HANG

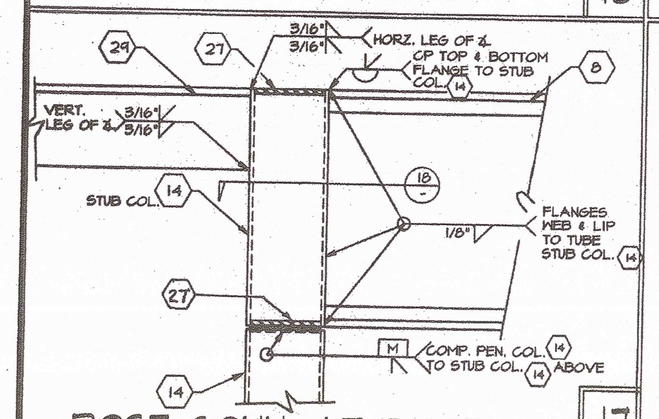

POST CONN. AT ROOF 17

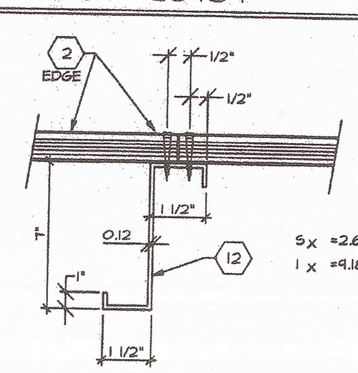

FLOOR JOIST 12

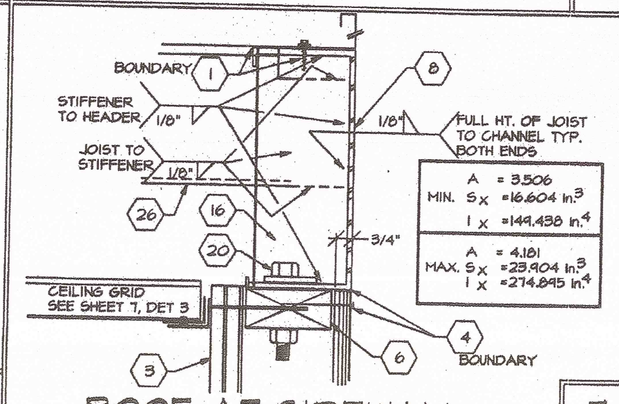

ROOF AT SIDEWALL 7

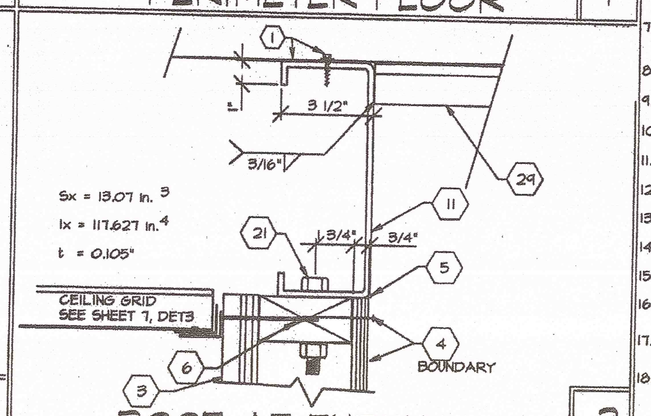

ROOF AT ENDWALL 2

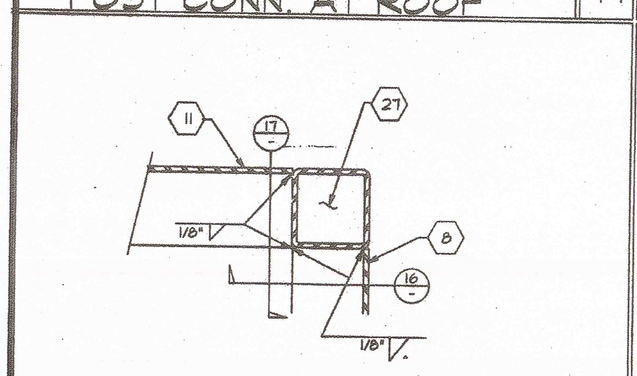

POST CONN. AT ROOF 18

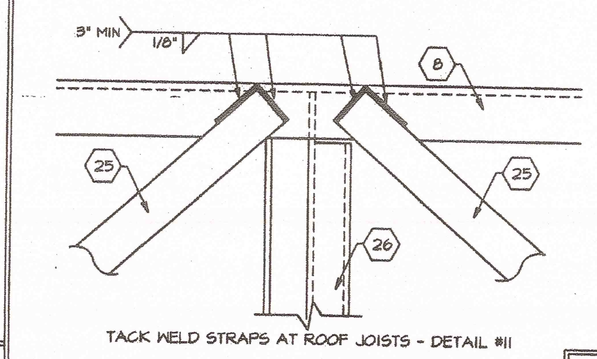

TACK WELD STRAPS AT ROOF JOISTS - DETAIL #11

20 Ga. STRAP @ RF. BEAM 13

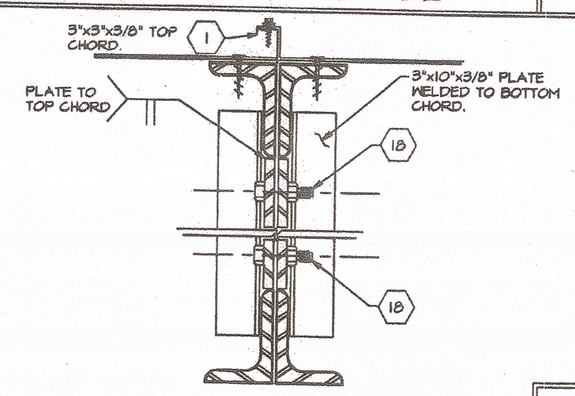

TRUSS AT MODLINE 8

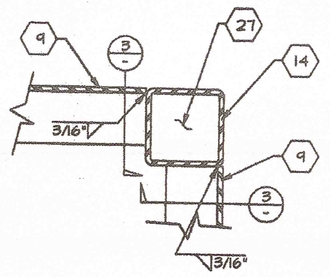

CORNER CONN. AT FLOOR 3

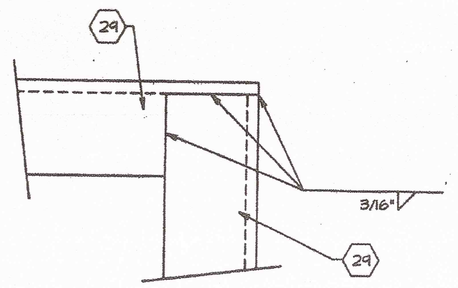

CORNER @ OVERHANG 19

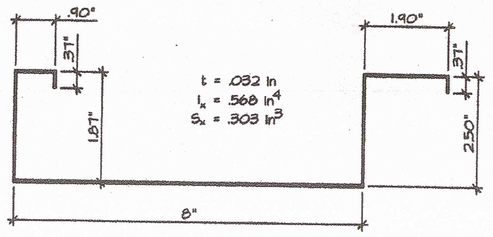

ROOF PANEL SECTION 14

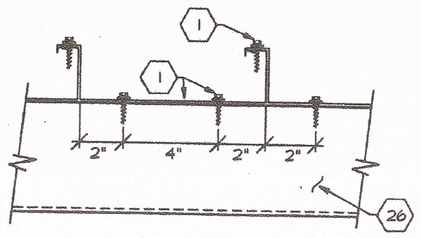

METAL ROOF AT JOIST 9

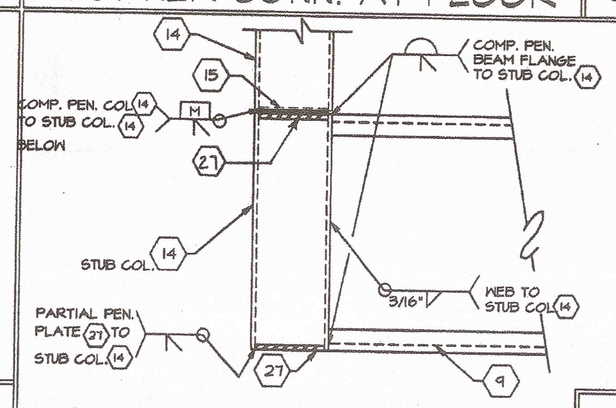

POST CONN. AT FLOOR 4

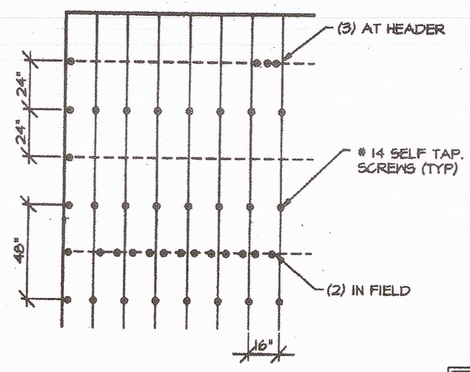

TYPICAL ROOF FASTENING 20

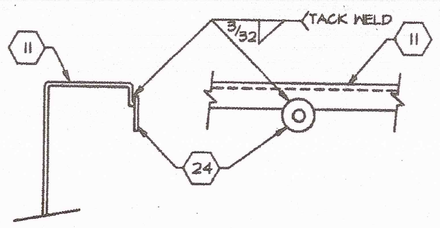

WELD WASHER SUSPENDED CEILING HANGER WIRE 15

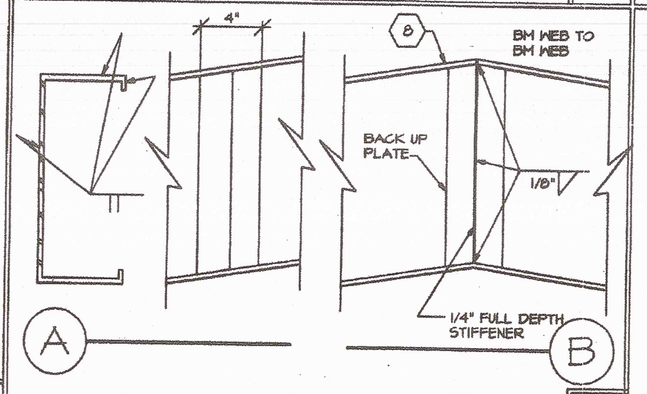

METAL ROOF AT JOIST 10

5

D.S.A.

REVISED

IDENTIFICATION STAMP DIV. OF THE STATE ARCHITECT OFFICE OF REGULATION SERVICES

PC 253

AC FLS SS

DATE

APP. 658 39 6A.

9-3-96

IDENTIFICATION STAMP DIV. OF THE STATE ARCHITECT

03 110412

AC FLS SS TB

Date SEP 06 2017

CHECKED

REVISIONS

16833 Krameria Ave., Riverside, CA. 92504
Phone (909) 789-7196
Fax (909) 789-0263

AURORA MODULAR INDUSTRIES

RELOCATABLE BUILDING FOR:
WILLIAMS/SCOTSMAN GROUP

STRUCTURAL DETAILS AND NOTES
22 GA. ROOFING

BY JSG DATE 9-3-96

SHEET 6B

3767

CAD FILE NO. PC253-6B.DWG

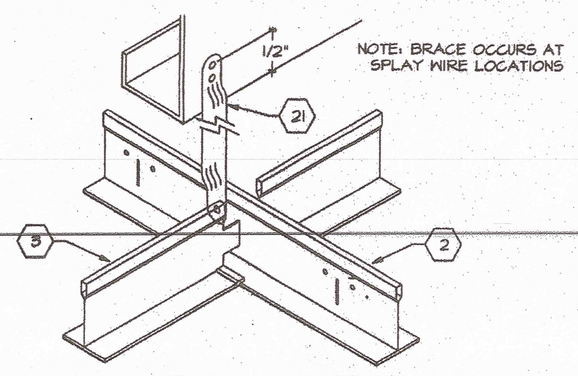

VERTICAL BRACE 5

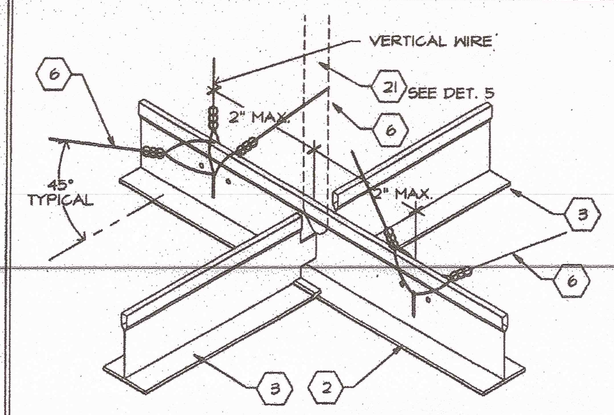

SPLAY WIRE 1

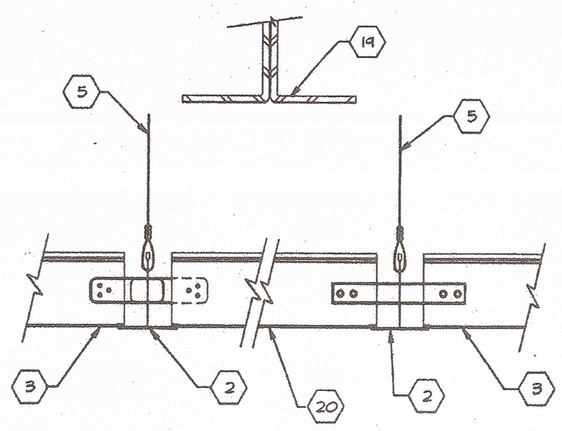

6

GRID AT MODLINE 2

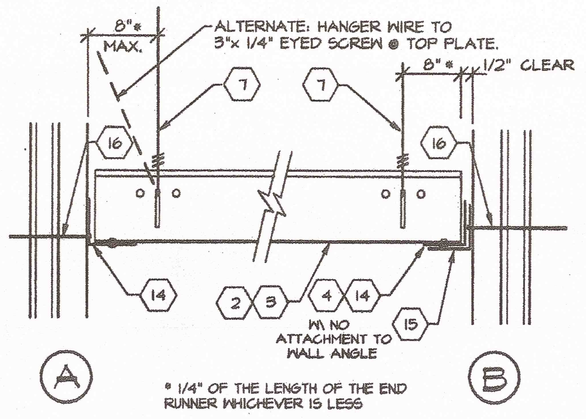

7

GRID AT WALL 3

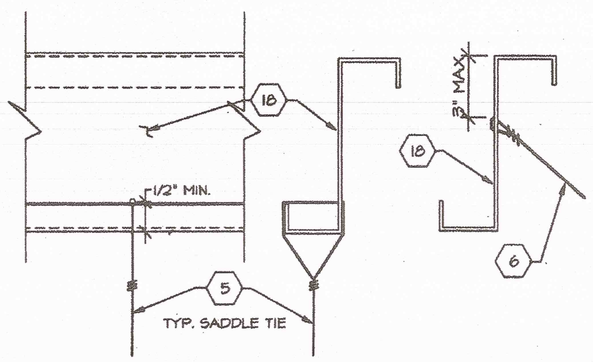

HANGER WIRE SPLAY WIRE

8

WIRE ATTACHMENT 4

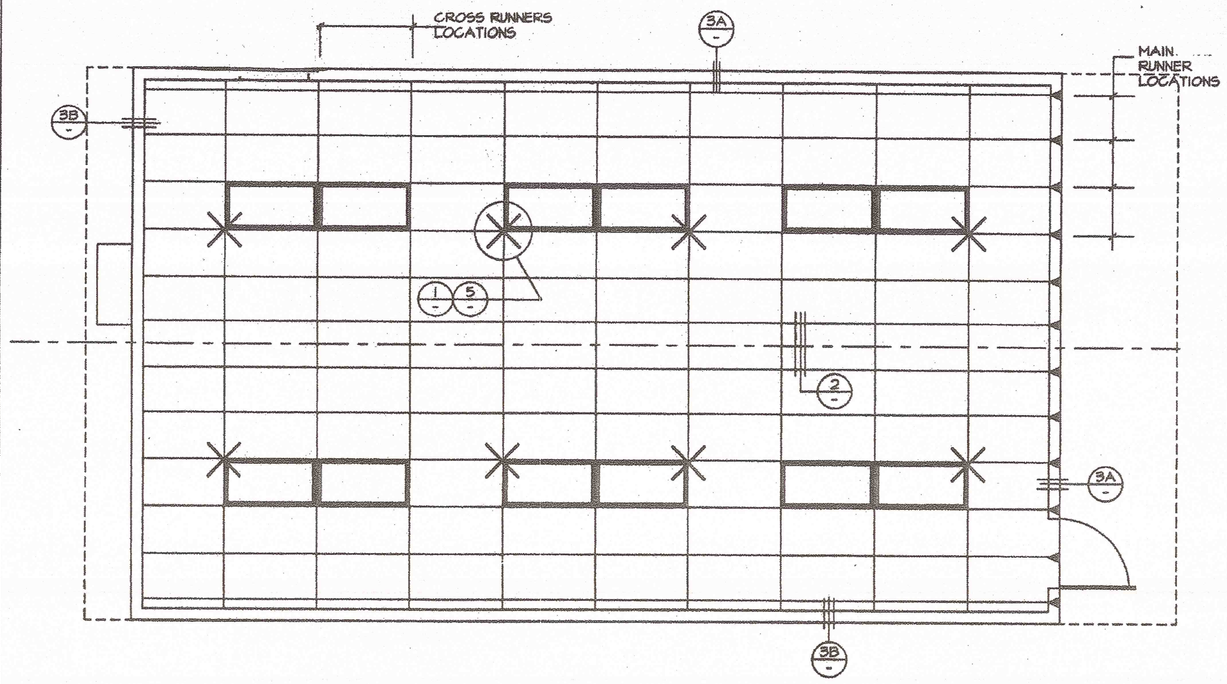

REFLECTED CEILING PLAN

SCALE 1/4" = 1'-0"

CEILING HEIGHT 8'-9"

'A' UNIT SHOWN
'B' UNIT OPP. HAND

KEYNOTES

1 MAIN RUNNERS @ 4'-0" O.C. MAX. WITH HANGER WIRES SPACED @ 4'-0" O.C. MAX.

2 MAIN RUNNER: DONN CORP. DX-26 HEAVY DUTY

3 CROSS RUNNER: DONN CORP. DX-424 HEAVY DUTY

4 WALL RUNNER: DONN CORP. MT-EV

5 TYPICAL HANGER WIRE TO BE 12 Ga. STEEL WIRE ATTACHED TO STRUCTURE ABOVE AND TO GRID WITH (3) TIGHT TURNS WITHIN 1 1/2" - SEE DETAIL 4

6 TYPICAL SPLAY WIRE TO BE 12 Ga. STEEL WIRE ATTACHED TO STRUCTURE ABOVE AND TO GRID WITH (4) TIGHT TURNS WITHIN 1 1/2" - SEE DETAIL 4

7 AT END OF ROWS OF RUNNERS, A HANGER WIRE SHALL BE ATTACHED WITHIN 8" (OF ANY WALL OR SOFFIT) OR 1/4 LENGTH OF END TEE WHICHEVER IS LEAST

8 VERTICAL WIRES MORE THAN 1:6 OUT OF PLUMB SHALL HAVE COUNTERBALANCE WIRES INSTALLED.

9 RUNNERS MAY BE ATTACHED TO WALL MOLDING AT (2) ADJOINING WALLS; AT OTHER WALLS NO ATTACHMENT. WHERE THERE IS NO ATTACHMENT THERE SHALL BE A 1/2" CLEARANCE BETWEEN END RUNNER AND FACE OF WALL.

10 CEILING AREAS EVERY 144 SQ. FT. OR LESS SHALL HAVE SPLAY WIRES INSTALLED AS INDICATED ON CEILING PLAN SPLAY WIRES SHALL BE TAUT BUT SHALL NOT DISTORT GRID.

11 ELECTRICIAN SHALL PROVIDE (2) SLACK HANGER WIRES AT OPPOSITE CORNERS OF ALL LIGHT FIXTURES. WIRES SHALL BE ATTACHED TO STRUCTURE ABOVE PER NOTE 5. LIGHT FIXTURES SHALL BE ATTACHED TO CEILING GRID WITH (2) #8 SHEET METAL SCREWS.

12 DUCTWORK, IF REQUIRED, SHALL BE RIGIDLY ATTACHED TO STRUCTURE ABOVE AT INTERVALS NOT TO EXCEED 4' AND SHALL NOT BE CLOSER THAN 6" TO ANY WIRE.

13 CEILING REGISTERS, WHEN INDICATED ON PLANS, SHALL BE ATTACHED TO STRUCTURE ABOVE PER NOTE 5.

14 CONT. WALL 7/8" ANGLE WITH POP RIVET TO EACH MEMBER.

15 7/8" CONTINUOUS WALL ANGLE.

16 6d NAIL @ 16" O.C. INTO BLOCK OR STUD.

17 NOT USED

18 ROOF JOIST- SEE SHEET 5.

19 ROOF TRUSS SEE SHEET 5.1

20 CLOSE OFF CROSS TEE- INSERT ONE END OF CROSS TEE INTO MAIN RUNNER WITH BAYONET. CUT OPPOSITE END TO FIT (IF LESS THAN 24"). INSERT MIN. 20 ga. MTL. STRAP THRU MAIN RUNNER, SECURE TO CROSS TEE W/ (2) #8 TEK SCREWS AT EACH END.

21 VERTICAL BRACE- 1/2" STEEL CONDUIT AT SPLAY WIRE LOCATIONS. DRILL 1/8" HOLE THRU CONDUIT AT TOP & BOTTOM. ATTACH CONDUIT TO JOIST ABOVE W/ (2) #8 TEK SCREWS. WITHIN 2" OF CROSS RUNNER

D.S.A.

REVISED

IDENTIFICATION STAMP DIV. OF THE STATE ARCHITECT OFFICE OF REGULATION SERVICES

PC 253

AC FLS SS

DATE 5-10-96

A16-65037

9-2-96

IDENTIFICATION STAMP DIV. OF THE STATE ARCHITECT

03 110412

AC FLS SS TB

SEP 06 2011

CHECKED

REVISIONS

REGISTERED PROFESSIONAL ENGINEER JAMES T. BURNS No. 39002 STRUCTURAL STATE OF CALIFORNIA

LICENSE EXPIRES 6-30-1998

16833 Krameria Ave., Riverside, CA. 92504
Phone (909) 789-7196
Fax (909) 789-0263

AURORA MODULAR INDUSTRIES

RELOCATABLE BUILDING FOR:
WILLIAMS/SCOTSMAN GROUP

REFLECTED CEILING PLAN

BY JEG DATE 9-3-96

SHEET 1

3767

C.A.D. FILE NO. PC253-1.DWG

File: H:\PC_253\PC253-7 Last edited: 09/07/95 @ 08:19 by: Jerry

PANEL A — 120/240 VOLT — 1 PHASE — 3 WIRE

100 a BUS — 100 a MAIN

	OUTLETS recept	OUTLETS lights	OUTLETS other	WATTAGE A ø	WATTAGE B ø	WATTAGE C ø	BREAKER amp	BREAKER pole	REMARKS
1	3	—		540	—		20	1	
2	—	6	EXTERIOR LIGHT	916	—		20	1	
3	3	—		—	540		20	1	
4	—	6		—	816		20	1	
5		—	HEATPUMP	2148			40	2	3.5 TON HVAC
6	—								
7		—			2148				
8									
9									
10									
11									
12									
13									
14									
15									
16									
17									
18									
19									
20									
TOTALS				3604	3504		= 7108		29.6 amps conn.
LCL = 6028				LCL x.25			= 1507 / 8615		35.9 amps

ELECTRICAL LEGEND

SYMBOL	DESCRIPTION
+ 15"	DUPLEX RECEPT - 15a 125v 3 WIRE GROUNDING TYPE. "GFI" DENOTES GROUND FAULT INTERRUPTER
+ 48"	LIGHT SWITCH - SINGLE POLE
	JUNCTION BOX
	DISCONNECT SWITCH -BUILT INTO A/C UNIT
+ 48"	THERMOSTAT
+ 48"	FIRE ALARM PULL STATION, J-BOX & CONDUIT ONLY
+ 8'-6"	FIRE ALARM HORN, J-BOX & CONDUIT ONLY
	ELEC. PANEL
	CLOCK 6" BELOW CEILING LINE

FIXTURE SCHEDULE

TYPE	SYMBOL	DESCRIPTION	WATTS	MANUFACTURER
		2' x 4' FLUORESCENT DROP IN FIXTURE, ACRYLIC PRISMATIC LENS, ENERGY SAVING BALLAST. (4) 35 WATT TUBES, WT. 27 lbs	136 WATTS	CRESCENT 24TE440DLA
		INCANDESCENT SURFACE MOUNTED EXTERIOR LIGHT WITH IMPACT RESISTANT ENCLOSURE	100 WATTS	KENALL 3663

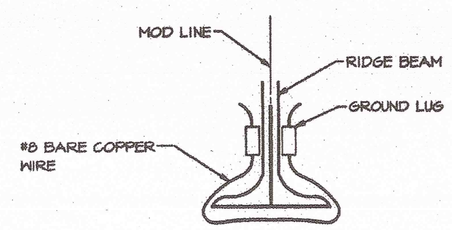

MODULE BONDING

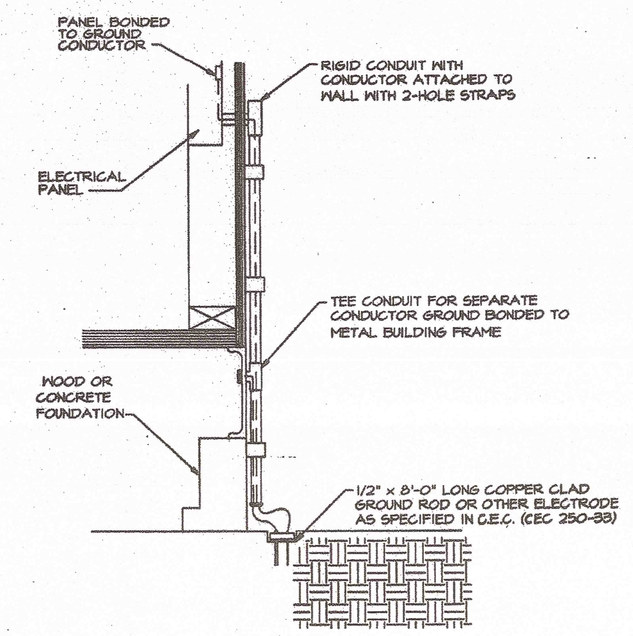

SYSTEM GROUND DETAIL

NOT BY PORTABLE MANUFACTURE

1 SIZE OF CONDUCTORS SHALL COMPLY WITH CEC TABLE 250-95.
2 BOND SEPARATE CONDUCTORS FROM GROUND ROD TO ELECTRICAL PANEL AND TO METAL BUILDING FRAME (CEC 250-81). IN ADDITION TO THE DETAIL SHOWN ABOVE, BOND THE ELECTRICAL GROUND TO METAL WATER PIPE EMBEDDED AT LEAST 10 FT. INTO THE SOIL IF AVAILABLE. (CEC 250-81 & 250-83).
3 ALL MODULES OF THE METAL FRAME BUILDING SHALL BE ELECTRICALLY BONDED TOGETHER. (BOLTING ONLY IS NOT ACCEPTABLE BONDING.)
4 CHECK RESISTANCE TO GROUND. IF RESISTANCE EXCEEDS 25 OHMS, INSTALL ADDITIONAL GROUND RODS (CEC 250-84C) AS REQUIRED. WITH CONDUCTORS, AS SHOWN, SEPARATED BY AT LEAST 6'-0" UNTIL RESISTANCE IS 25 OHMS OR LESS.
5 FIELD INSPECTOR SHALL WITNESS THE GROUNDING TEST.

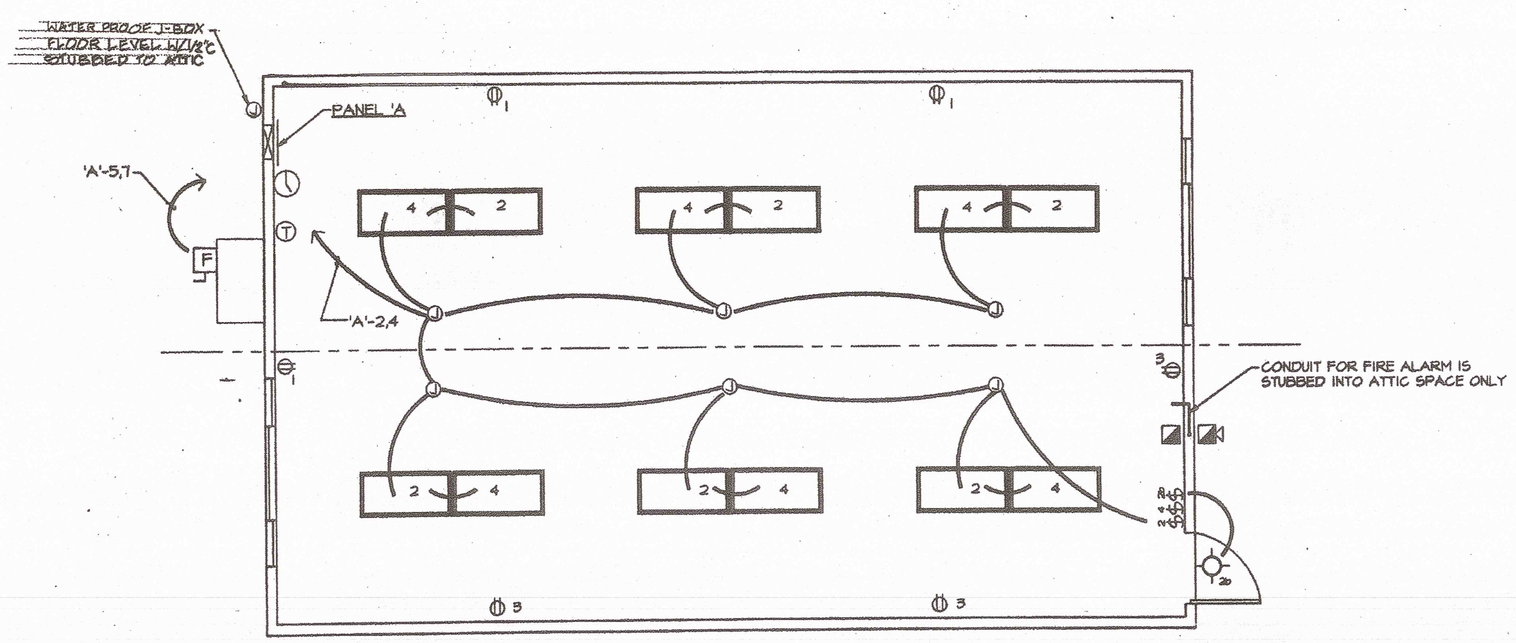

'A' UNIT SHOWN
'B' UNIT OPP. HAND

LIGHTING AND POWER PLAN

SCALE: 1/4" = 1'-0"

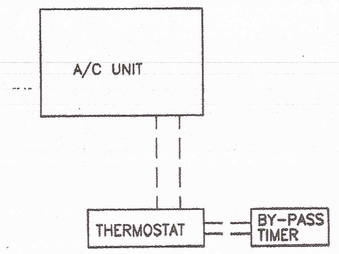

A/C CONTROL WIRING

D.S.A.

REVISED

IDENTIFICATION STAMP DIV. OF THE STATE ARCHITECT OFFICE OF REGULATION SERVICES

PC 253

AC FLS SS

DATE

IDENTIFICATION STAMP DIV. OF THE STATE ARCHITECT

03 118412

AC FLS SS TB

Date SEP 06 2017

CHECKED

REVISIONS

LICENSE EXPIRES 6-30-1996

16533 Krameria Ave., Riverside, CA. 92504
Phone (909) 789-7196
Fax (909) 789-0253
AURORA MODULAR INDUSTRIES

RELOCATABLE BUILDING FOR:
WILLIAMS/SCOTSMAN GROUP

ELECTRICAL, POWER & LIGHTING FLOOR PLAN & PANEL SCHEDULE

BY: JGL DATE: 9-3-96

SHEET 8

3767

CAD FILE #: PC253-8.DWG

File: H:\PC_253\PC253-8.DWG Last edited: MAY 06, 96 @ 12:20 p.m. by: ??

GENERAL NOTES AND SPECIFICATIONS

SECTION 1A

1. GENERAL

A. The requirements of the General Conditions of the agreement and this General Requirements apply to the several trade sections with the same force as though fully repeated in each trade section.

B. Name brands are indicated to establish a standard of quality. Items of equal or better quality may be substituted for the listed brand named products.

C. All work shall comply with the requirements of titles 19, and 24 California Code of Regulations. No changes shall be made from D.S.A. approved drawings or specifications without prior written approval of D.S.A. and the District Architect.

2. SCOPE OF WORK

A. The work consists of manufacturing off-site in a plant, and installing on-site, modular relocatable buildings as defined herein and shown and detailed on drawings.

B. All requirements of Titles 19, and 24 of the State of California Code of Regulations (C.C.R.) relating to inspections and verified reports shall be complied with and shall include:

1. General responsible charge of Field Administration by the Architect of Record.
2. Inspection in-plant during the course of construction by an inspector approved by the Division of the State Architect and the District Architect. The inspector shall be responsible for and approved to inspect the general construction welding, mechanical and electrical work. Cost of these inspections shall be borne by the School District.
3. On site inspection of the building installation electrical and utility of the building installation by an inspector approved by the Division of the State Architect and retained by the School District.
4. Other special tests or inspections as may be required by the Division of the State Architect.

3. WORK NOT INCLUDED

A. All on-site or off-site utilities and the connection of them to the building unless indicated on the drawings.

B. All leveling, grading or other site preparation except concrete or wood leveling strips, where required, unless otherwise indicated on the drawings.

C. Fire alarm system, fire extinguisher, program bell, clock, public address system, intercom system, TV system unless otherwise indicated on the drawings.

4. WHEELS AND HITCH

Shall remain the property of the Contractor.

5. ACCESSIBILITY OF SITE

The School District shall provide access to the site for the installation of buildings. Removal of trees, shrubs, fencing, sprinklers, etc. necessary for the move-in of buildings shall be the responsibility of the School District.

6. GENERAL CONSTRUCTION

A. Structural Frame – Each module shall be designed as a moment frame structure to withstand vertical and horizontal loads and comply with requirements of the Division of the State Architect. The necessary provisions are incorporated in the structure to permit the relocation of the structural frame in sections not exceeding 12 feet in width.

B. Floor – The floor shall be steel framed with a design live load of 50 lbs per square foot unless noted otherwise on drawings.

SECTION 3A CAST IN PLACE CONCRETE

1. SCOPE OF WORK

A. Contractor shall provide all materials, labor and services for concrete work indicated on drawings.

2. MATERIALS

A. Portland Cement – Type 1, standard brand, ASTM C-150

B. Aggregate – Washed sand, gravel, rock ASTM C-33

C. Reinforcing steel – ASTM A615 grade 40, deformed, ASTM-305.

3. WORKMANSHIP

A. Minimum compressive strength at 28 days – 2000 psi; maximum aggregate size 1"; maximum 7.5 gallons of water per sack of cement; minimum of 5.3 sacks of cement per yard; maximum slump 4". Transit mixed concrete shall be used.

SECTION 5A STRUCT. AND MISC. STEEL

1. SCOPE OF WORK

Contractor shall provide all materials, labor and as specified and indicated on the drawings.

services required for structural and miscellaneous steel

2. MATERIALS

A. Structural Steel Shapes – ASTM A-36, open hearth or electric furnace only, all regular shapes as described in AISC Construction Manual, unless otherwise noted.

B. Cold Formed Light Gauge Steel – ASTM A-570 Grade 33, minimum yield 33,000 PSI.

C. Structural Pipe and Tubing – ASTM AK-500 Grade B.

D. Bolt Material – Bolts and nuts, American Standard Regular, as detailed in AISC Construction Manual, fabricated from structural quality steel, ASTM A-307.

E. Arc-welding Electrodes – Class E-70 Series for welding A-36 steel to A-36 and A-60 Series for welding A-570 steel to A-36, conforming to requirements of the "Structural Welding Code" of American Welding Society, latest edition.

3. WORKMANSHIP

A. GENERAL – All work shall conform to the requirements of AISC Standard Specifications, Titles 21 and 24 of the California Code of Regulations and the American Iron and Steel Institute Specifications for Design of Light Gauge Steel Structural Members.

B. WELDING – All welding done by shielded electric-arc or flux cored-arc process complying with requirements of the "Structural Welding Code" of the American Welding Society. Welding done by operators qualified by tests acceptable to the Division of the State Architect.

C. ERECTION – Structural Steel erected true, straight, plumb and to its designated locations. Field connections bolted or welded as indicated on the drawings.

D. NAILS, BOLTS, SCREWS, NUTS, etc. – for exterior work shall be cadmium plated or galvanized.

E. HANDRAILS – Fabricated as detailed, welds ground smooth.

F. SHOP PAINT –

1. Exposed steel coated with one shop coat
2. Non-exposed steel coated with one shop coat
3. All surfaces thoroughly cleaned by effective means prior to application of shop coats.

G. TESTS –

1. Provide mill certificates or test the following members:

[18/23/18x3 1/2" 10ga. [7"x 9.8, Z 6"x 14 Ga., Z 7"x 11 Ga. L 3"x3"x3/8"
[18"x3 1/2x12 Ga., TS 3 1/2"x3 1/2"x3/16" , L 1 1/2"x1 1/2"x3/16"

2. Welds shall be inspected and/or tested per T-24 Section -2727(e)

SECTION 6A CARPENTRY

1. SCOPE OF WORK

Contractor shall provide all labor, materials and services to install carpentry.

2. MATERIALS

Lumber grade marked in accordance with "Standard grading and Dressing Rule No. 16" of West Coast Lumber Inspection Bureau or "Grading Rules for Western Lumber, 3rd Edition" of Western Wood Products Association. Plywood grade marked in accordance with "Product Standard PS 1-83 for Softwood Plywood" of American Plywood Association, complying with UBC Standard 25-9.

A. JOISTS, RAFTERS, HEADERS, – Hem Fir Stud Grade or better.
B. PLATES – Hem Fir Stud Grade or better.
C. BLOCKING – Hem Fir Stud Grade or better.
D. SILLS AND LUMBER IN CONTACT WITH CONCRETE, MASONRY OR EARTH – Hemlock Fir pressure treated with Wolman Salts, Tanalith U or chromated copper arsenic; Standard and Better grade – 2x4; No. 2 grade – 2x6 and larger, cut ends dipped in preservative (Cuponal).
E. PLYWOOD ROOF DECKING – APA C-D grade, Group 1, Exposure 1 with exterior glue. On overhangs, C-C plugged and touch sanded.
F. PLYWOOD FLOOR DECKING – APA STURD-I-FLOOR 48" o.c. 1-1/8" tongue and groove floor sheathing.
G. EXTERIOR SIDING/SHEATHING – APA Type 303, exterior, T-1-11 8" o.c., siding. Sheathing 1/2" CDX.
H. Not used.
I. STUDS AND POSTS – Hem Fir Stud Grade.
J. FASTENERS – All nails shall be corrosion resistant per U.B.C. Standard 25.1717.
K. BUILDING TRIM – 1x Resawn select H.F. or Masonite.
L. DOOR/WINDOW TRIM – 1x4 Resawn H.F.

3. WOKMANSHIP

A. FRAMING – securely nailed, bridged and blocked to form rigid structure. Work cut, fitted and assembled level, plumb and true to line. Trim in as long lengths as possible with all standing trim in one piece. Trim sealed at all edges.

B. NAILING – in accordance with Title 24 C.C.R. – California Building Code, Table 25-Q. Nails shall be corrosion resistant box nails.

C. EXTERIOR WALLS – factory fabricated. Caulking provided between perimeter of wall and structural members providing weatherproof and watertight seal. Necessary closures, seals, and flashings placed at top and base support of panels and around openings.

D. MACHINE APPLIED NAILING – shall have prior demonstration and approval by DSA field representative and the architect. The approval is subject to continued satisfactory performance. Plywood shall have a minimum thickness of 3/8". If nailheads penetrate the outer ply more than would be normal for a hand hammer or if minimum allowable edge distances are not maintained, the performance will be deemed unsatisfactory.

E. Not used

F. Trim sealed at all edges. Sealant painted to match trim or siding.

G. Retighten all bolts before closing in.

H. The design moisture content of lumber is 19% or less before fabrication, other revision thru chance order will be required.

SECTION 7B SHEET METAL

1. SCOPE OF WORK

Contractor shall provide all labor, materials and services to install indicated sheet metal.

2. MATERIALS

A. SHEET METAL – Steel sheets hot dip galvanized with 1.25 Oz. per square foot zinc coating conforming to ASTM A123. Minimum 26 Ga. unless otherwise noted on the drawings.

B. SOLDER – Of standard brand, Grade "A" of equal parts lead and tin ASTM B32.

C. FLUX – Zinc saturated muriatic acid.

3. WORKMANSHIP

Sheet metal accurately formed to dimensions and shapes detailed with true straight lines, corners and angles. Flashings installed in longest lengths possible. Exterior work formed, fabricated and installed so that it adequately provides for expansion and contraction in the completed work and finishes water and weather tight. Aluminum shall be separated from ferrous metal by polyethylene or flood coat of asphalt paint.

SECTION 7C METAL ROOFING

1. GENERAL

Metal roofing to be 22 Ga. interlocking panels with standing seam. Steel deck shall be galvanized and conform to ASTM A-446 grade A. All fasteners to have neoprene washers.

Metal roofing to be 26 Ga. ribbed gal. sheet metal interlocking panels installed over asphalt base sheet over 3/4" plywood roof deck. All fasteners shall not penetrate metal roof panels.

SECTION 7J SEALANT

1. SCOPE OF WORK

Contractor shall provide all labor, materials and services to seal buildings.

2. MATERIALS

"Vulkem" Sealant, polyurethane, manufactured by MAMECO INTERNATIONAL or approved equal.

Sealant applied to dry clean surfaces, wherever indicated on details and as needed to make building watertight, in accordance with manufacturer's specifications.

SECTION 8B HOLLOW METAL DOORS & FRAMES

1. SCOPE OF WORK

Contractor shall provide all labor, materials and services to install hollow metal doors & frames.

2. MATERIALS

A. DOORS – Type L full flush, manufactured by Steelcraft Manufacturing company or approved equal, 18 Ga. 1-3/4" thick.

B. FRAMES – 16 Ga. cold rolled, 2" faces.

2. MATERIALS

Sheet metal accurately formed to dimensions and shapes detailed with true straight lines, corners and angles. Flashings installed in longest lengths possible. Exterior work formed, fabricated and installed so that it adequately provides for expansion and contraction in the completed work and finishes water and weather tight.

SECTION 8D FINISH HARDWARE

1. SCOPE OF WORK

Contractor shall supply and install finish hardware as specified and as required.

2. DOOR SCHEDULES see shts 1 and 9.

3. SPECIAL REQUIREMENTS

A. Exit doors shall be operable from the interior without key or special knowledge or effort.

B. Closures for exterior doors shall be set for a maximum opening pressure of 8.5 lbs; interior doors shall be set for maximum opening pressure of 5 lbs.

C. Deadbolts not permitted unless operable with a single effort using lever handle.

D. Hardware shall be centered between 30" and 44" above finished floor.

SECTION 9E PAINTING

1. SCOPE OF WORK

Contractor shall provide all labor, materials and services to paint building. All exposed surfaces of building and ramp shall be painted except aluminum window frames and thresholds.

2. MATERIALS

A. For Exterior Wood:

Ref. brand –	VISTA
Primer	4100
Finish	6000

B. For Interior Trim:

Ref. brand –	VISTA
Finish	7000

C. For Metal:

Ref. brand –	VISTA
Finish	7000

3. WORKMANSHIP

A. EXTERIOR – Wood siding, trim and skirting – apply two coats of exterior flat acrylic paint sprayed on.

B. INTERIOR TRIM – Trim not precoated shall be painted with two coats of semi-gloss latex over primer.

C. METAL – All metal surfaces shall be painted with two coats of alkyd finish coat over shop primer.

D. RAMP – One coat of non-skid surfacing.

SECTION 13F SITE ASSEMBLY

1. SCOPE OF WORK

Contractor shall provide all labor, materials and services to prepare the building elements, transport them from the plant to the site and to complete the assembly at the site.

The condition of the site, such as drainage and soil bearing capacity, shall be the responsibility of the School District. Unless specifically called for in the contract, steps, ramps, walkways or handrails shall not be the responsibility of the contractor.

2. ASSEMBLY OF ELEMENTS

A. In a location on the site as determined by the School District, the contractor shall place concrete leveling strips or other suitable supports as detailed on the drawings.

B. The elements shall be brought to the site on wheel assembly and transferred to the prepared site. Great care shall be taken to avoid damage to the elements by racking or bumping.

C. Connection of the elements together shall be done according to instruction on the drawings. Flashings, trim and other loose items shall be installed per details on the drawings.

SECTION 15A AIR CONDITIONING

1. SCOPE OF WORK

Contractor shall provide all labor, materials and services to install the air conditioning system as shown on the drawings and specifications, including A/C units and accessories, remote thermostat, grille and power wiring complete to load center. contractor shall instruct owner's operators on operation and maintenance of A/C system.

2. EQUIPMENT –See note below for size and type.

3. WORKMANSHIP

Units shall be installed complete and operating with all accessories in accordance with the manufacturer's instructions.

SECTION 16A ELECTRICAL

1. SCOPE OF WORK

Contractor shall provide all labor, materials and services for electrical installation complete with associated equipment and fixtures in operating conditions ready for use. The work includes: light and power systems, lighting fixtures complete with lamps, connections and disconnects to A/C equipment.

2. MATERIALS

All new complying with requirements of Calif. Electric Code and National Fire Protection Association.

A. ELECTRIC METALLIC TUBING – couplings and flex conduit galvanized or sherardized.

B. PANELBOARDS – flush mounted with hinged doors and indexed card holders.

C. CONDUCTORS – copper, insulated for 600 volts, type THHN for sizes #12 to #6, type THW for larger sizes. Minimum size – #12.

D. RECEPTACLES – General Electric 5242-2 or equal +15".

E. CLOCK RECEPTACLE – Eagle or equal.

F. SWITCHES – General Electric 5901-2 or equal +48"

G. LIGHTING FIXTURES – 2'X 4' fluorescent drop in type fixtures with 35 watt lamps and energy saving ballast.

3. WORKMANSHIP

Materials and equipment installed in a secure, neat, workmanlike manner in accordance with code requirements. Panel board cards filled out. Conduit and cable installed in wall and ceiling spaces. Work piercing waterproofed areas flashed and sealed to a watertight condition.

NAILING SCHEDULE

Joists or rafters to sides of studs 8" joist or less	(3)-16d
for each additional 4" in depth of joist	(1)-16d
Bridging to joist, toenails each end	(2)-8d
a. blocking between joists or rafters toenails each side, each end	(2)-10d[10]
b. blocking between studs, each end	(2)-16d
	or (2)-10d toenails
Sole plate to joist or blocking face nail	16d @ 16" o.c.
Top plate to stud, end nail	(2)-16d
Stud to sole plate	(4)-8d toenail or (2)-16d endnail
Double studs, face nail	16d @ 24" o.c.
Double top plates, face nail	16d @ 16" o.c.
Continuous header, two pieces	16d @ 16" o.c. along each edge
Ceiling joists to plate, toenail	(3)-8d
continuous header to stud, toenail	(4)-8d
Ceiling joists, laps over partitions, face nail.	(3)-16d
Ceiling joists to parallel rafters, face nail.	(3)-16d
Joists or rafters at all bearings, toenails each side.	(2)-10d
1" brace to ea. stud and plate, face nail	(2)-8d
Built up corner studs	16d @ 24" o.c.

PLYWOOD AND PARTICLE BOARD[5]

Subfloor, roof and wall sheathing to framing:	
1/2" and less	6d[2]
19/32" – 3/4"	8d[3] and 6d[2]
7/8" – 1"	8d[2]
1-1/8" – 1-1/4"	10d[3] or 8d[2]
Combination subfloor/underlayment to framing:	
3/4" or less	6d[2]
7/8" – 1"	8d[2]
1-1/8" – 1-1/4"	10d[3] or 8d[2]
Panel siding to framing:	
1/2" or less	6d[6]
5/8"	8d[6]

1. Common or box nails may be used except where otherwise stated.
2. Deformed shank.
3. Common
4. Not used
5. Nails spaced at 6" o.c. at edges, 12" o.c. at intermediate supports (10" at intermediate supports for floors), except 6" o.c. at all supports where spans are 48" or more. For nailing of plywood and particle board diaphragms and shear walls, refer to Section 2513 (c). Nails for wall sheathing may be common, box, or casing.
6. Corrosion resistant siding or casing nails conforming to the req. of Section 2516 (j) 1.
7. Fasteners spaced 3" o.c. at ext. edges and 6" o.c. at intermediate supports.
8. Corrosion resistant roofing nails with 7/16" dia. head and 1-1/2" length for 1/2" sheathing and 1-3/4" length for 25/32" sheathing conforming to the requirements of Section 2516 (j) 1.
9. Corrosion resistant staples with nominal 7/16" crown and 1-1/8" length for 1/2" sheathing and 1-1/2" length for 25/32" sheathing conforming to the requirements of Section 2516 (j) 1.
10. When possible, nails driven perpendicular to the grain shall be used instead of toenails.

Manville — **Three Ply Mineral-Surface Fiber Glass Built-Up Roofs**

Specification No. 3 G N C
For use over Plywood or other Nailable Decks on inclines of up to 6" per foot
For Region 3 only

U.L. Classifications
Class A
Max. Slope: 1"
Deck: Non-Combust. & Combust.
Insulation: none
Surfacing: Cap Sheet
Class B (see Class A)
Class C (see Class A & B)

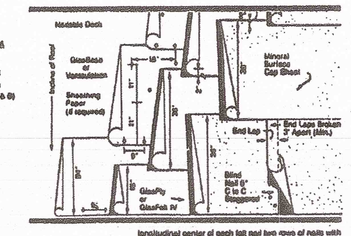

.01 General
This specification is for use over any type of structural deck (without insulation) which can receive and adequately retain nails or other types of mechanical fasteners as may be recommended by the deck manufacturer. Examples of such decks are wood and plywood decks, concrete decks, steel decks with plywood or insulating panels either poured or premed or over 18 Ga. of lightweight insulating concrete.

Note: All general instructions contained in the current Manville Roofing Systems Manual shall be considered part of this specification.

Flashings: See section on BUR Flashings, Manville Roofing Systems Manual.

.02 Materials per 100 sq. ft. of roof area

Sheathing Paper: Wood board decks only . . . . . 1 layer
Felts: Glastlex or Ventilation Felt . . . . . 1 layer
GlasPly or GlasPak IV . . . . . 1 layer
GlasLap Mineral Surfaced Cap Sheet . . . . . 1 layer

Bitumen: Refer to Para. 7.7 or 11.0.2.2
Approx. Installed weight (lbs.): 174

.03 Application of Roofing
Over wood board decks one ply of sheathing paper must be used under the base felt next to the deck.

Using Glastlex, start with a 36" width. Following felts to be applied full width, lapping each felt 2" over the preceding one. Nail the laps at 9" centers and down the longitudinal center of each felt and two rows of nails with rows spaced approximately 11" apart and nails staggered on approximately 60" centers. Use nails or fasteners appropriate to the type of deck.

Starting at left low edge apply one 12" wide, then a full 36" width GlasPly or GlasPak IV, overlapping the preceding felt by 2". All following felts are to be applied full width with the same 2" overlap. Install each felt so that it will be shed water and not permit it to pond. Mop in the EVT (asphalt applied hot) before the felt is a maximum uniform mass of 25 lbs. per square over the entire surface.

Prior to application, cut the cap sheet into handmadeto lengths (12'-0") and allow to flatten.

Starting at the low edge apply one layer of the cap sheet, being sure to maintain 2" side laps and 6" end laps over the preceding sheets. Back-mop the cap sheet and then it into a hot asphalt mopping of asphalt (30-40 lbs. per sq. ft. of roofing). The temperature of asphalt should be 400°F at the point of application, when the cap sheet is set into it, its temperature is approximately 350°F above the EVT. This will assure proper floating of the cap sheet coating and result in maximum bonding. The cap sheet must be firmly and uniformly set into the hot asphalt with all edges well sealed. For slopes greater than 1" per foot nailing is required. Refer to Para. 11.0.6.

1	3'-0" x 6- 8" x 1 3/4"	HOLLOW METAL	18 Ga. FULL FLUSH IN 16 Ga. METAL FRAME.	
2				
3				
4				

DOOR SCHEDULE

A	8'-0" x 4'-0"	CLEAR ANODIZED ALUM FRAME	XOX SLIDER WITH PANE 46% TEMPERED GRAY TINT GLAZING ~~ALUMINUM FRAMED SCREENS ON OPERABLE SASH.~~	
B				
C				
D				
E				

WINDOW SCHEDULE

SIDING	4' x 9' x 5/8"		DURATEMP	APA RATED OR EQUAL, GROUP 1, TYPE 303 EXTERIOR SIDING
ROOFING		BUILT-UP	MANVILLE	3-GNC (SEE SPEC. BELOW)
		26 Ga.	PLACER	
		22 Ga.	CAL. STEEL	
TRIM	WOOD 1"x4"		RESAWN	@ DOORS

EXT. FINISH

		ITEM	DESCRIPTION	ROOMS: CLASSROOM
INTERIOR FINISH	FLOOR	CARPET	COMPLYING WITH THE STATE OF CALIF. SPEC. T220-21K-01 GROUP 1 TYPE A, CLASS 24, DENSITY 4600, DIRECT GLUE DOWN. (SEE NOTE BELOW)	*
	CLG	SUSPENDED	ARMSTRONG 2910 TILE (FLAME SPREAD CLASS 1) IN DONN CORP 'DX' SERIES HEAVY DUTY GRID.	*
	WALLS	VINYL	1/2" VINYL COVERED TACK BOARD (FLAME SPREAD CLASS 1) OVER 1/2" GYP BOARD.	*
		CHALKBOARD	1/2" PARTICLE BOARD SUBSTRATE, FULL WIDTH MAP RAIL WITH CORK INSERT AND SIX MAP HOOKS, EXTRUDED ALUMINUM MOLDING. WITH FLAG HOLDER.	*

SPECIAL NOTE:
ALL FINISHES SHALL COMPLY WITH C.B.C. CHAPTERS 3,7,8, & 10

ITEM	DESCRIPTION		TYPE 1	TYPE 2	TYPE 3	TYPE 4	TYPE 5	TYPE 6
LOCK SET LEVER HANDLE	'SCHLAGE' D70PD RHODES	26D FINISH	*					
HINGES	'HAGAR' RC 1279 BB 4.5"x 4.5" NRP PC		*					
CLOSER	'NORTON' 1601, 8 LBS. CLOSING PRESSURE		*					
THRESHOLD	'PEMCO' 271A		*					
DOOR BOTTOM	'PEMCO' 216AV		*					
WEATHER-STRIP	'PEMCO' 299AV		*					
DOOR TOP	'PEMCO' 346A							
DOOR STOP	'QUALITY' 1201 ES		*					

DOOR HARDWARE — HARDWARE

SIZE	3.5 TON HEAT PUMP
SUPPLY	DUCTED
RETURN	DIRECT
HEAT STRIP	SEE SHT. 8
ELECTRICAL	SEE SHT. 8

A/C INFORMATION

NOTE:
PREPARATION FOR SUB FLOOR TO ACCEPT FINISH FLOORING IS BY FLOORING CONTRACTOR. 1 1/8" PLYWOOD SUB-FLOOR IS PLUGGED AND TOUCH SANDED, ANY DEFORMITIES SHALL BE FILLED AND SANDED BY THE FLOORING CONTRACTOR. THE JOINT AT THE MODULE JOINING SHALL NOT BE LARGER THAN 1/8" AND SHALL BE FILLED AND SANDED BY FLOORING CONTRACTOR.

D.S.A.
REVISED
IDENTIFICATION STAMP DIV. OF THE STATE ARCHITECT OFFICE OF REGULATION SERVICES
PC 253
AC FLS SS
DATE 5-10-96
APP. 65839
IDENTIFICATION STAMP DIV. OF THE STATE ARCHITECT
09 810 022
AC FLS SS TB
Date SEP 0 6 2017

CHECKED

REVISIONS

LICENSE EXPIRES 1-31-1996

AURORA MODULAR INDUSTRIES
16833 Krameria Ave., Riverside, CA. 92504
Phone (909) 789-7196
Fax (909) 789-0263

RELOCATABLE BUILDINGS FOR:
WILLIAMS/SCOTSMAN GROUP

SPECIFICATIONS, INTERIOR AND EXTERIOR FINISH SCHEDULES

BY Sab DATE 9-3-96
SHEET 9

3767 CAD FILE NO. PC253-9.DWG

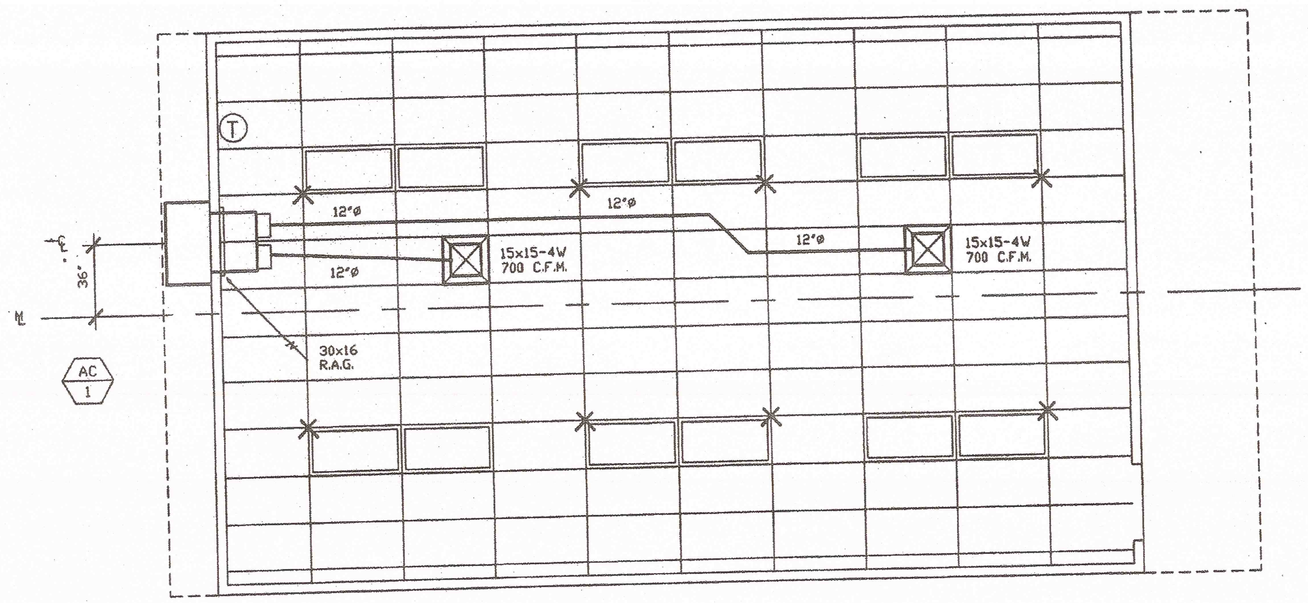

AIR CONDITIONING FLOOR PLAN

1/4" = 1'-0"

EQUIPMENT & MATERIAL SCHEDULE

AC 1

BARD MODEL #WH42-A10 WALL MOUNT HEAT PUMP
41,500 BTUH COOLING, S.E.E.R. = 10.0
41,000 BTUH HEATING, HSPF = 6.80
1400 CFM @ .3" S.P., WT. = 510 LBS.
208/230v-1 PH-60 CY., MAX. F.L.A. = 26.2 AMPS.
MAX. FUSE = 60 AMP.
WITH COMMERCIAL ROOM VENTILATOR

SUPPLY PLENUM: 24 ga. GALVANIZED IRON SHEETS W/ 1" LINER INSULATION

INTERIOR DUCTWORK: POLYCORE FLEX DUCT CLASS 1 UL-181 W/ TAPED COLLARS ON BOTH ENDS

REGISTER BOXES: 24 ga. GALVANIZED IRON SHEETS W/ 1/2" LINER INSULATION

SUPPLY AIR REGISTERS: KRUEGER '6200-F23' SERIES (MINIMUM SIZE 15x15)

RETURN AIR GRILLES: METALAIRE 'RH' SERIES

THERMOSTAT: WHITE RODGER #1F92 W/ CLEAR FACE GUARD

ATTACH ALL SUPPLY AND RETURN AIR GRILLES TO BOXES W/ 4 #8 S.M.S. THEN TO ROOF STRUCTURE W/ 4 - 1 1/2" X 24 ga. GALVANIZED STRAPS AT ALL CORNERS.

ATTACH ALL FLEX DUCT TO ROOF STRUCTURE W/ 1 - 1 1/2" X 24 ga. GALVANIZED STRAP AT INTERVALS NOT TO EXCEED 4'.

SEAL ALL JOINTS AIR TIGHT.

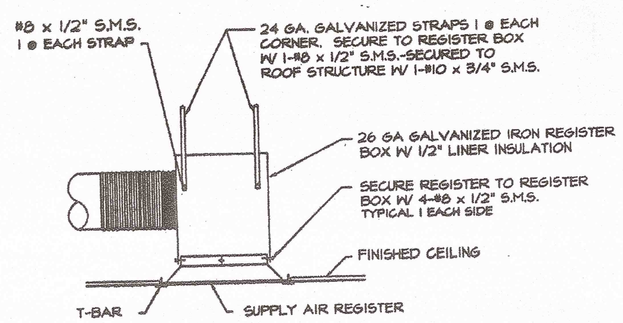

REGISTER BOX DETAIL

N.T.S.

DIVISION OF STATE ARCHITECT
OFFICE OF REGULATION SERVICES
APPL 69839
DATE 9-6-96

IDENTIFICATION STAMP
DIV. OF THE STATE ARCHITECT
03 118412
AC FLS SS TB
Date SEP 06 2017

CHECKED

REVISIONS

16833 Krameria Ave., Riverside, Ca. 92504
Phone: (909) 782-7196
Fax: (909) 789-0253

AURORA MODULAR INDUSTRIES

RELOCATABLE BUILDING FOR:
WILLIAMS/SCOTSMAN GROUP

AIR CONDITIONING FLOOR PLAN

BY JEG DATE 9-3-96

SHEET M-1

3767

CAD FILE NO. PC258-M1.DWG

CLASS LEASING, LLC.

1221 Harley Knox Blvd. Perris, CA 92571-7408
(951) 943-1908 Fax (951) 943-5768

3.01 **CARPENTRY:**

1. Scope of Work: Contractor shall provide all labor, materials and services to install carpentry.

2. Workmanship:
   a) FRAMING: securely nailed, bridged and blocked to form rigid structure. Work cut, fitted and assembled level, plumb and true to line. Trim in as long lengths as possible with all standing trim in one piece. Trim sealed at all edges.

   b) NAILING: in accordance with the title 24 CCR-Table 2304.9.1. Nails shall be corrosion resistant box nails.

   c) Machine applied nailing shall have prior demonstration and approval by DSA Field Inspector and the Architect. The approval is subject to continuous satisfactory performance. Plywood shall have a minimum thickness of 3/8". If nail heads penetrate the outer ply more than would be normal for a hand hammer or if minimum allowable edge distances are not maintained, the performance will be deemed unsatisfactory.

   d) TRIM: sealed at all edges. Sealant painted to match trim or siding.

4.01 **MATERIAL SPECIFICATIONS:**

1. Structural framing shall be Hem Fir- Lauch graded in accordance with the standard grading rules of the Western Wood Products Association or standard grading rules No. 16 of the West Coast Lumber Inspection Bureau, latest editions. Grades shall be as follows unless noted otherwise on the drawings. (Hem Fir South is not allowed.) Each piece shall be grade marked and no piece may fall below grades indicated. All framing except as noted Hem Fir No. 2

2. Plywood shall be as shown on these drawings with exterior glue in accordance with U.S. Product Standard PS 1-07. All panels shall be marked with an APA grade mark with an identification index as shown on drawings. Use 4'x8' panels minimum, except at boundaries and at framing changes where minimum panel dimension shall be 24" at roofs and floors and 12" at walls.

3. Bolts for timber connections shall conform to ANSI/ASME Standard B18.2.1-2012 & 2012 edition of NDS (the National Design Specification for Wood Construction by the National Forest Products Association). Bolts shall be installed in accordance with the requirement of 2012 NDS.
   Bolt holes shall be 1/32 to 1/16 inch larger than bold diameter. Bolts shall be full body steel bolts with minimum yield strength of 45,000 PSI. Re-tighten bolts before closing in work.

4. Lag screws shall be steel and conform to ANSI/ASME Standard B18.2.1 and 2012 NDS. Holes for lag screw shanks shall be bored the same depth and diameter as the shank. The remaining depth of penetration of the screw shall be bored to 70% of the shank diameter. One quarter inch (1/4") diameter lag screws need not have pre-drilled holes if it can be shown that wood members are not damaged during installation. Provide full diameter body lag screws with bending yield strengths per Table 11J in NDS

5. Provide malleable iron washers or equivalent cut plate washers (not less than a standard cut washer) under nuts and / bolt or lag screw heads which bear on wood.

6. Wood screws shall conform to ANSI/ASME Standard B18.6.1 and the requirements of the 2012 NDS. Galvanized or other corrosion resistant coating where exposed to weather or used in foundations.
   Screws shall be steel with cut threads and bending yield strengths per Table 11L in NDS.

7. Wood members shall be cut or notched only as shown on structural drawings.

8. When required nailing tends to split wood members, nail holes shall be pre-bored to 3/4 of the nail diameter.

9. Structural nailing shall be with BOX NAILS per all requirements of 2012 NDS. Nailing not specifically indicated shall comply with CCR Title 24, Part 2, Table 2304.9.1. All nails shall be galvanized or other corrosion resistant coating where exposed to weather, in foundations and as noted on plans, per the requirements of CCR Title 24, Part 2, with minimum bending yields per table 11N in NDS. (See nail equivalence below.)

10. Nail equivalence:
    (provide minimum nail lengths as required for specified penetration, TYPICAL: U.N.O.)

    6d equals .113" DIA. - provide 1.36" minimum point penetration
    8d equals .131" DIA. - provide "1.57" minimum point penetration

11. Pressure preservative treatment shall be per Section 2303.1.8, CCR Title 24, Part 2. Provide quality mark on all treated foundation members that comply with CBC 2303.1.8.1. All foundation members shall be marked as "For ground contact" or "For above ground use" as appropriate. Pressure treated material shall comply with AWPA Standard U1 as required by CBC 2303.1.8. Treat all cut ends of pressure treated members with an approved preservative. (Willard WB Copper Green 2% or an approved equivalent). Where noted, members below the sub floor that are not a part of the foundation shall be pressure treated.

12. Only material in contact with ground needs to be pressure treated, all other foundation lumber can be DF or HF#2 or equal.

13. If machine nailing is utilized for this project, contractor shall comply with all requirements of CCR Title 24, Part 2. Machine nailing is subject to approval by the Structural Engineer or Architect and the Division of the State Architect.

14. Fasteners for pressure-preservative treated and fire-retardant treated wood shall comply with Section 2304.9 of CBC.

15. Nails and spikes used in wet or exterior locations shall comply with Section 2304.9.1.1 of CBC.

16. Shim material shall be plywood CD EXP 1 or equal (not pressure treated).

17. Used lumber in good condition is acceptable for use in foundation system.

18. Tie plates shall conform to A-1011 Grade 33.

5.01 **SITE INSTALLATION REQUIREMENTS FOR DSA CLASSROOM BUILDINGS:**

In the case of equipment located in the State of California, the LESSEE (School District) is responsible for the site being cleared (free of grass, trees, shrubs, etc) and graded to within 4 1/2" of level grade for each building. If the site exceeds the 4 1/2" level grade requirement additional costs may be charged to lessee.

Under no circumstances should the site be greater that 9" from level grade or have less than a 1000 PSF MINIMUM SOIL BEARING PRESSURE.

Prior to delivery, the lessee shall mark the four corners of the building on the site, including door location. Should special handling be required to either place, install or relocate the classroom on the lessee's site due to site obstruction such as fencing, landscaping, other classrooms, etc., additional costs will be charge to the lessee.

6.01 **TEST AND INSTALLATION:**

1. Provide Electrical Grounding Test per DSA IR E-1.

2. Field Welding for welded tie plate option. (If used, requires Test and Inspection.)

   The example form DSA 103's shown on this sheet are for illustration purposes only.
   A form DSA 103 is to be completed for each application that this PC is being incorporated into and all example form DSA-103's are to be crossed out on this drawing.

3. No other tests and inspections are required.

SPECIFICATIONS
RELOCATABLE CLASSROOMS

1.01 **GENERAL REQUIREMENTS:**

1. The requirements of the general conditions of the agreement and these General Requirements apply to the several trade sections with the same force as though fully repeated in each section.

2. Name brands are indicated to establish a standard of quality. Items of equal or better quality may be substituted for the listed brand named products.

1.02 **SCOPE OF WORK:**

1. The work consists of installing on-site, modular Relocatable buildings as defined herein, shown and detailed on the drawings.

2. All requirements of CCR (California Code of Regulation) Title 19 and 24 relating to inspections and verified reports shall be complied with and shall include:

   a) General responsible charge of Field Administration by the Architect of Record.

   b) Inspection during the course of construction by an inspector approved by DSA (Division of the State Architect) and the District Architect. The inspector shall be responsible for and approved to inspect the general construction, welding, mechanical and electrical work. Cost of these inspections shall be borne by the School District.

   c) On site inspection of the building installation, electrical and utility of the building installation or connection by an inspector approved by the DSA and retained by the School District.

   d) Other special tests or inspections as may be required by DSA.
      Cost of these inspections/tests shall be borne by the School District.

1.03 **WORK NOT INCLUDED:**

1. All on-site or off-site utilities and the connection of them to the building unless indicated on the drawings.

2. All leveling, grading or other site preparation (except concrete or wood leveling strips, where Required) unless otherwise indicated on the drawings.

3. Fire alarm system, program bell, clock, public address system, intercom system, TV system, computer data or any other low voltage system, unless otherwise indicated on the drawings or the lease agreement.

1.04 **ACCESSIBILITY OF SITE:**
The School District shall provide access to the site for the installation of the building. Removal of trees, shrubs, fencing, sprinklers, etc. necessary for move-in and removal of the buildings shall be the responsibility of the School District.

2.01 **SITE ASSEMBLY:**

1. Scope of Work: Contractor shall provide all labor, materials and services to prepare the building elements, transport them from the plant to the site and to complete the assembly at the site.

   The condition of the site, such as drainage and soil bearing capacity, shall be the responsibility of the School District and the District Architect.

2. Assembly of Elements:
   a) In a location on the site as determined by the District Architect. The contractor shall place the foundation as detailed on the drawings.

   b) The elements shall be brought to the site on wheel assembly and transferred to the prepared site. Great care shall be taken to avoid damage to the elements by racking or bumping.

   c) Connection of the elements together shall be done according to instructions on the drawings. Flashing, trim and other loose items shall be installed per plans and details of the original building manufacturer's drawings.

DSA-103 Statement of Structural Tests & Special Inspections - 2013 CBC

SAMPLE: FOR WELD PLATE OPTION ONLY

IMPORTANT: This form is only a summary list of structural tests and special inspections required for this project. The actual tests and inspections must be performed as detailed on the DSA approved documents. The project inspector is responsible for providing inspection of all tests of construction, including but not limited to, special inspections not listed on this form such as structural wood framing, high-load wood shearwalls, cold-formed steel framing, anchorage of non-structural components, etc., per Title 24, Part 2, Chapter 17A. NOTE: This form is also available for projects submitted for review under the 2007 and 2010 CBC.

INSTRUCTIONS: Click or plan sign (+) before any category or subcategory to reveal additional items and special inspections. An "X" before a listed test or inspection indicates it is a mandatory requirement. A shaded box indicates a test or special inspection that may be required, depending on the scope of the construction and other factors. A shaded box can be edited indicating your selection of that test. - Note: A minus (-) on a category or subcategory heading indicates that it can be collapsed. However, any selections you may have made will be observed. Click on the "COMPLETE" button to show only the tests finally selected. For more information on use of this form, see DSA-103.INSTR.

Note: Substantiate site to the 2012 edition of the California Building Code (CBC) unless otherwise noted.

	TEST OR SPECIAL INSPECTION			CODE REFERENCE AND NOTES
+	SOILS			
+	CONCRETE			Table 1705.3
+	MASONRY			Table 1705.4, TMS 402/602-08 Table 1.19.3
-	STEEL			Table 1705.2.1
-	17. STRUCTURAL STEEL AND COLD-FORMED STEEL USED FOR STRUCTURAL PURPOSES			
	Material Verification:			
X	a. Verify that all materials are appropriately marked and that: •Mill certifications indicate material properties that comply with requirements, •Material sizes, types and grades match with requirements.	Periodic	*	*By special inspector when performed off-site; by project inspector for steel shipped directly to project site without welding or fabrication.
X	b. Test unidentified materials	Test	1-10	ASTM A370, A370 (*) ASTM A370
	Inspections:			
X	a. Verify member locations, bracing and all details conform to the field.	Continuous	- PI	
X	a. Verify stiffener locations, connection tab locations and all details conform to the shop.	Periodic	SI	
-	19. WELDING:			DSA IR 17-1, AWS D1.1 and AWS D1.3 (AWS D1.3 for cold formed steel).
	Verification of Materials, Equipment, Welders, etc:			
X	a. Verify weld filler material identification markings per AWS designation listed on the DSA approved documents and the WPS.	Periodic	SI -	
X	b. Verify weld filler material manufacturer's certificate of compliance.	Periodic	SI	
X	c. Verify WPS, welder qualifications and equipment.	Periodic	SI	DSA IR 17-1.
-	19.2 FIELD WELDING			
X	a. Inspect single-pass fillet welds ≤5/16"	Periodic	SI	Per AISC 360 (and AISC 341 as applicable), DSA IR 17-1.
+	WOOD			
+	OTHER			

Field Welding Inspection; Special Inspection Verified Report - Form DSA-282

Key to Columns	
1 - Type -	2 - Performed By -
Continuous – Indicates that a continuous special inspection is required	SI – Indicates that the special inspection is to be performed by a registered professional engineer or his or her authorized representative
Periodic – Indicates that a periodic special inspection is required	Lab – Indicates that the test or inspection is to be performed by a testing laboratory accepted in the DSA Laboratory Evaluation and Acceptance (LEA) Program. See section 4-335, 2013 CCR Title 24, Part 1.
Test – Indicates that a test is required	PI – Indicates that the special inspection is to be performed by the project inspector
	SI – Indicates that the special inspection is to be performed by a special inspector

DATAPRINT CORP., 700 NO. CLARKSON ST., SAN MATEO, CA. 94401

STOCKBRAFT® FORM NO. 101-04

APPLICABLE BUILDING CODES
ALL NEW WORK SHALL COMPLY AND CONFORM TO THE REQUIREMENTS OF THE 2013 CBC

2013 CALIFORNIA CODE OF REGULATIONS (CCR) As of January 01, 2014*
-2013 CALIFORNIA BUILDING STANDARDS ADMINISTRATIVE CODE PART 1, TITLE 2 (2012 INTERNATIONAL BUILDING CODE VOLUMES 1-2 WITH 2013 CALIFORNIA AMENDMENTS)
-2013 CALIFORNIA ELECTRICAL CODE (CEC) PART 3, TITLE 24, CCR (2011 NATIONAL ELECTRICAL CODE WITH 2013 CALIFORNIA AMENDMENTS)
-2013 CALIFORNIA MECHANICAL CODE (CMC) PART 4, TITLE 24, CCR (2012 UNIFORM MECHANICAL CODE WITH 2013 CALIFORNIA AMENDMENTS)
-2013 CALIFORNIA PLUMBING CODE (CPC) PART 5, TITLE 24, CCR (2012 UNIFORM PLUMBING CODE WITH 2013 CALIFORNIA AMENDMENTS)
-2013 CALIFORNIA ENERGY CODE (CEC) PART 6, TITLE 24, CCR*
-2013 CALIFORNIA FIRE CODE PART 9, TITLE 24, CCR (2012 INTERNATIONAL FIRE CODE WITH 2013 CALIFORNIA AMENDMENTS)
-2013 CALIFORNIA REFERENCED STANDARDS CODE PART 12, TITLE 24, CCR
TITLE 19 CCR-PUBLIC SAFETY, STATE FIRE MARSHALL REGULATIONS.

DESIGN DATA:

FLOOR LIVE LOAD = 50 PSF, 50 + 20 PSF PARTITIONS, 100 PSF
ROOF LIVE LOAD = 20 PSF REDUCIBLE FOR TRIBUTARY AREA
WIND SPEED =120 MPH (V) (3 SECOND GUST), Kzt = 1.0
SNOW LOAD: PROJECT IS NOT LOCATED IN A SNOW REGION.
BUILDING CODES = 2012 IBC AND CBC 2013

SEISMIC DESIGN DATA: MOMENT FRAME PC'S
Basic Seismic-Force-Resisting System = STEEL MOMENT FRAME
ANALYSIS PROCEDURE USED = EQUIVALENT LATERAL FORCE
Seismic Design Category = E (per CBC Section 1613A.5.6)
Design Base Shear: 24x40 BUILDING = 9480 # (Roof, Floor, Walls & Partitions)
30x40 BUILDING = 14190 # (Roof, Floor, Walls & Partitions)
48x40 BUILDING = 18920 # (Roof, Floor, Walls & Partitions)
t = 1.0 Ca=0.641 R: =3.5 SITE CLASS = D
Ss = 2.7 mapped value / 0.6 Ss = 2.16 (For Design)
Sds = 1.44 (Site Specific Documentation Justifying SDS Shall Be Submitted To DSA Prior To Approval)
Sn1 = 1.3 Sn1 = 1.3
RISK CATEGORY = II

SEISMIC DESIGN DATA: SHEAR WALL PC'S
Basic Seismic-Force-Resisting System = WOOD PANEL SHEAR WALLS
ANALYSIS PROCEDURE USED = EQUIVALENT LATERAL FORCE
Seismic Design Category = E (per CBC Section 1613A.5.6)
Design Base Shear: 24x40 BUILDING = 9480 # (Roof, Floor, Walls & Partitions)
30x40 BUILDING = 14190 # (Roof, Floor, Walls & Partitions)
48x40 BUILDING = 18920 # (Roof, Floor, Walls & Partitions)
t = 1.0 Ca=0.222 R: =6.5 SITE CLASS = D p =1.3
Ss = 2.7 mapped value / 0.6 Ss = 2.16 (For Design)
Sds = 1.44 (Site Specific Documentation Justifying SDS Shall Be Submitted To DSA Prior To Approval)
Sn1 = 1.3 per CBC Figure 1613A.5(2) Sn1 = 1.3
RISK CATEGORY = II

FLOOD DESIGN DATA: Project is not located in a flood zone.

LIMITATIONS FOUNDATION PC ONLY:

FOUNDATION ONLY PC IS DESIGNED TO SUPPORT THE SUPERSTRUCTURE FOR THE RELOCATABLE BUILDINGS AS LISTED ON THIS DRAWING.

THE DESIGN CALCULATIONS ARE BASED ON THE FOLLOWING:

1. DSA APPROVED STOCKPILE BUILDINGS
2. ROOF OVERHANGS OF 5'-0" MAXIMUM
3. SINGLE SLOPE OR DUAL SLOPE BUILDINGS
   WALL HEIGHT: 9'-0" MAXIMUM ON DUAL SLOPE BUILDING.
   WALL HEIGHT: 10'-4" MAXIMUM ON SINGLE SLOPE BUILDING.
   (HEIGHT DETERMINED FROM FINISH FLOOR IN BUILDING TO BOTTOM OF STEEL ROOF STRUCTURE: BEAMS OR ROOF HEADERS)
   WALL HEIGHT: 9'-10" MAXIMUM ON SHEAR WALL-DUAL SLOPE BUILDING
4. WALL DEAD LOAD OF 10 PSF (NO STUCCO)
5. FLOOR DEAD LOAD OF 8 PSF

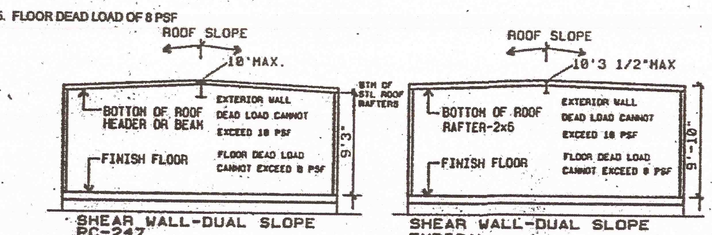

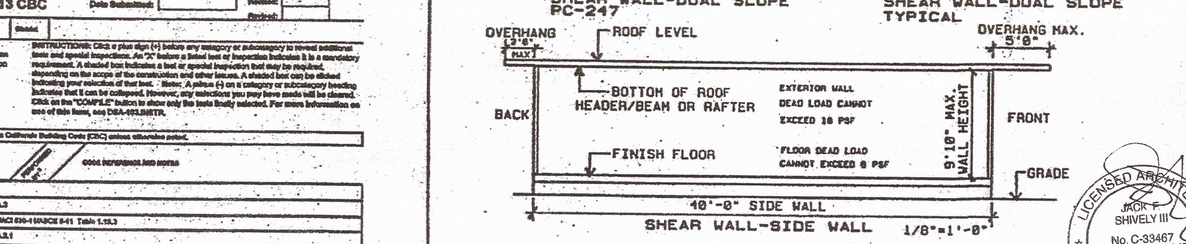

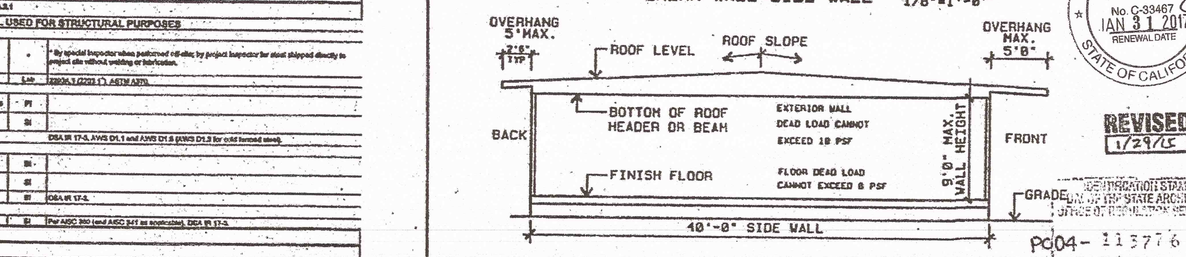

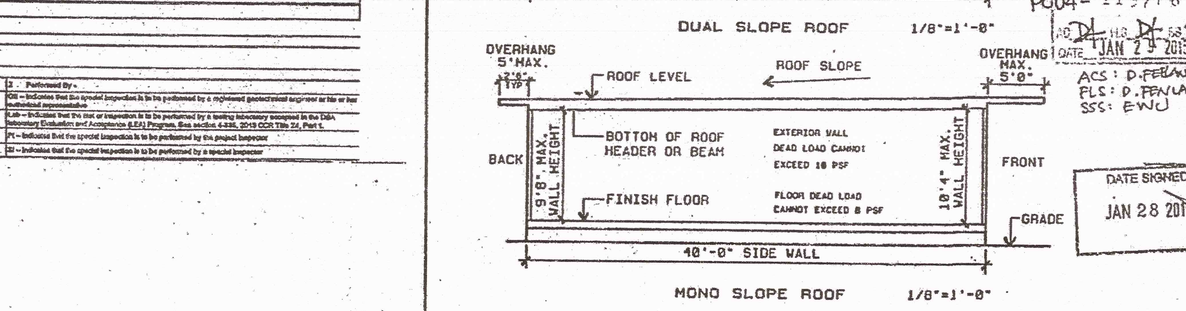

TYPICAL ELEVATIONS ARE SHOWN TO CLARIFY FOUNDATION PC ONLY LIMITATIONS DOCUMENTATION SHALL BE PROVIDED BY ENGINEER OF GENERAL RESPONSIBLE CHARGE TO BE REVIEWED AND APPROVED BY THE DSA STRUCTURAL PLAN REVIEWER.

IDENTIFICATION STAMP DIV. OF THE STATE ARCHITECT 03 118412 AC / FLS / SS TB Date SEP 06 2017

IDENTIFICATION STAMP DIV. OF THE STATE ARCHITECT 04 115204 ACS / FLS / SS RAF DATE APR 14 2016

LICENSED ARCHITECT JACK E. SHIVELY III No. C-33467 JAN 31 2017 RENEWAL DATE STATE OF CALIFORNIA

REVISED 1/29/15

SEISMIC/WIND STAMP DIV. OF THE STATE ARCHITECT OFFICE OF REGULATION SERVICES PC04-113776 AC DL FLS DL SS DATE JAN 29 2015 ACS: D.PEDERSON FLS: D.PEDERSON SS: E.WU

DATE SIGNED SEP 06 2014 REGISTERED PROFESSIONAL ENGINEER JAMES T. SIMPSON No. 3602 STRUCTURAL STATE OF CALIFORNIA LICENSE EXPIRES 6-30-2016

DATE SIGNED JAN 28 2015 REGISTERED PROFESSIONAL ENGINEER JAMES T. SIMPSON No. 3602 STRUCTURAL STATE OF CALIFORNIA LICENSE EXPIRES 6-30-2016

DIVISION OF STATE ARCHITECT PC 04-113776

PRE-CHECK (PC) DOCUMENT
CODE: 2013 CBC
A SEPARATE PROJECT APPLICATION FOR CONSTRUCTION IS REQUIRED

IDENTIFICATION STAMP DIV. OF THE STATE ARCHITECT OFFICE OF REGULATION SERVICES PC 04-113776 AC DL FLS DL SS DL DATE OCT 08 2014 ACS: D.PEDERSON FLS: D.PEDERSON SS: P.LOPEZ

SCOPE OF WORK: DSA FOUNDATION PLANS FOR EXISTING STOCKPILE BUILDINGS FOR CLASS LEASING, LLC.

SHEET INDEX: STOCKPILE BUILDING FOUNDATION– 2013 CODE UPDATE

F1.0	COVER SHEET, BUILDING DATA, STOCKPILE APPROVAL INDEX
~~F2.0 24x40 50 PSF~~	~~FOUNDATION PLAN AND DETAILS, ADJACENT BUILDING PAD~~
F2.1 24x40 50+20 PSF	FOUNDATION PLAN AND DETAILS, ADJACENT BUILDING PAD
~~F2.2 24x40 50 PSF~~	~~FOUNDATION PLAN AND DETAILS, ADJACENT BUILDING PAD~~
~~F3.1 30x40 50+20 PSF~~	~~FOUNDATION PLAN AND DETAILS, ADJACENT BUILDING PAD~~
~~F3.2 30x40 100 PSF~~	~~FOUNDATION PLAN AND DETAILS, ADJACENT BUILDING PAD~~
~~F4.1 48x40 50 PSF~~	~~FOUNDATION PLAN AND DETAILS, ADJACENT BUILDING PAD~~
~~F4.1 48x40 50+20 PSF~~	~~FOUNDATION PLAN AND DETAILS, ADJACENT BUILDING PAD~~
~~F4.2 48x40 100 PSF~~	~~FOUNDATION PLAN AND DETAILS, ADJACENT BUILDING PAD~~

SHEET INDEX:
~~BELOW GRADE CONCRETE FOUNDATION DESIGNED FOR MODTECH BUILDINGS ONLY~~

C1.0	COVER SHEET, BUILDING DATA, STOCKPILE APPROVAL INDEX
C2.0	24 x 40 - 50 PSF CONCRETE FOUNDATION PLAN & DETAILS, ADJACENT BUILDING PAD
C2.1	24 x 40 - 50+20 PSF CONCRETE FOUNDATION PLAN & DETAILS, ADJACENT BUILDING PAD
C3.0	36 x 40 - 50 PSF CONCRETE FOUNDATION PLAN & DETAILS, ADJACENT BUILDING PAD
C3.1	36 x 40 - 50+20 PSF CONCRETE FOUNDATION PLAN & DETAILS, ADJACENT BUILDING PAD
C3.2	36 x 40 - 100 PSF CONCRETE FOUNDATION PLAN & DETAILS, ADJACENT BUILDING PAD
C4.0	48 x 40 - 50 PSF CONCRETE FOUNDATION PLAN & DETAILS, ADJACENT BUILDING PAD
C4.1	48 x 40 - 50+20 PSF CONCRETE FOUNDATION PLAN & DETAILS, ADJACENT BUILDING PAD
C4.2	48 x 40 - 100 PSF CONCRETE FOUNDATION PLAN & DETAILS, ADJACENT BUILDING PAD

ADJACENT BUILDINGS: ONLY THOSE BUILDINGS MANUFACTURED BY THE SAME COMPANY MAY BE PLACED ADJACENT TO EACH OTHER

CLASS LEASING-APPROVED STOCKPILE A NUMBERS FOR THIS FOUNDATION PC

BUILDING DATA - 24 x 40 SHEAR WALL

STKP #	DSA #	PC-BASE	DATE	SIZE	FLOOR LOAD	BLDG MFG
STKP 1029	80643	SHR	10-21-1988	24 x 40	50+20#	MODTECH
STKP 02	82512	48138-SHR	11-06-1989	24 x 40	50#	MODTECH
STKP 01	82513	46760-SHR	11-06-1989	24 x 40	50#	MODTECH
STKP 03	82514	SHR	11-06-1989	24 x 40	50#	MODTECH
STKP 05	82518	45400-SHR	12-07-1989	24 x 40	50#	AURORA
STKP 04	82518	see PC 29 SHR	12-07-1989	24 x 40	50#	MODTECH
STKP 22	86113	PC 80	10-08-1990	24 x 40	50#	MODTECH
STKP 24	86830	PC 92	06-14-1991	24 x 40	50#	MODTECH
STKP 13	81967	PC 247	06-29-1994	24 x 40	50#	MODTECH
STKP 77	87970	PC 247	11-10-1997	24 x 40	50#	MODTECH

BUILDING DATA - 24 x 40 RIGID FRAME

STKP #	DSA #	PC-BASE	DATE	SIZE	FLOOR LOAD	BLDG MFG
STKP 11	82482	MFG	06-13-1991	24 x 40	50+20#	MODTECH
STKP 20	86031	PC 79	09-19-1990	24 x 40	50#	MODTECH
STKP 21	86032	PC 78	09-19-1990	24 x 40	50#	MODTECH
STKP 23	85347	PC 79	11-26-1990	24 x 40	50#	MODTECH
STKP SW	87194	PC 79	11-08-1991	24 x 40	50+20#	MODTECH
STKP 14	87679	PC 96	03-19-1992	24 x 40	50#	MODTECH
STKP 18	83288	PC 243	06-04-1995	24 x 40	50#	MODTECH
STKP 19	83321	PC 242	06-11-1995	24 x 40	50#	MODTECH
STKP 27	85493	PC 266	07-31-1996	24 x 40	50#	MODTECH
STKP 31	86318	PC 266	11-12-1996	24 x 40	50+20#	MODTECH
STKP 33	87333	PC 266	03-11-1997	24 x 40	50#	MODTECH
STKP 35	04-100117	PC 266	01-15-1998	24 x 40	50+20#	MODTECH
STKP 39	04-100595	PC 276	06-10-1998	24 x 40	50+20#	MODTECH
STKP 37	04-100596	PC 266	06-10-1998	24 x 40	50+20#	MODTECH
STKP 40	04-100690	PC 282	09-03-1998	24 x 40	50+20#	MODTECH
STKP 42	04-100829	PC 266	01-07-1999	24 x 40	50+20#	MODTECH
STKP 43	04-101855	PC 276	09-09-1999	24 x 40	50#	MODTECH
STKP 44	04-101602	PC 266	09-30-1999	24 x 40	50+20#	MODTECH
STKP 45	04-101768	PC 101268	12-16-1999	24 x 40	50#	MODTECH
STKP 61	04-102016	PC 101268	03-14-2000	24 x 40	50# P.*50+20#	MODTECH
STKP 53	04-102365	PC 101268	07-06-2000	24 x 40	50+20#	MODTECH
STKP 86	04-102824	PC 101268	12-21-2000	24 x 40	50#	MODTECH
STKP 82	04-104169	PC 101268	04-18-2002	24 x 40	50+20#	MODTECH
STKP 67	04-104812	PC 101268	12-05-2002	24 x 40	50+20#	MODTECH
STKP 70	04-105299	PC 104801	05-22-2003	24 x 40	50+20#	MODTECH
STKP 75	04-110431	PC 04-105337	06-05-2003	24 x 40	50#	MODTECH
STKP 76	04-105455	PC 04-104796	07-17-2003	24 x 40	50#	MODTECH
STKP 78	04-109208	PC 106884	12-03-2007	24 x 40	50#	CURRENT/SMI
STKP 107	85966	PC 266	05-24-1996	24 x 40	50#	MODTECH
STKP 109	86341	PC 275	05-20-1999	24 x 40	50#	MODTECH
STKP 110	04-100118	PC 04-100073	01-15-1998	24 x 40	50#	MSI
STKP 111	04-101984	PC 04-101419	03-09-2000	24 x 40	50#	MODTECH
STKP 112	04-104062	PC 04-101419	03-21-2002	24 x 40	50#	MODTECH
STKP 113	04-104310	PC 04-101419	06-02-2002	24 x 40	50#	MODTECH
STKP 114	04-105455	PC 04-104796	07-17-2003	24 x 40	50#	MODTECH
STKP 130	04-101527	PC 270	09-12-1999	24 x 40	50# /50+20#	MODTECH
STKP 131	04-104948	PC 04-101419	01-23-2003	24 x 40	50# /50+20#	MODTECH

BUILDING DATA - 36 x 40 RIGID FRAME

STKP #	DSA #	PC-BASE	DATE	SIZE	FLOOR LOAD	BLDG MFG
STKP SW	87194	PC 79	11-08-1991	36 x 40	70#	MODTECH
STKP 32	86318	PC 266	11-12-1996	36 x 40	50+20#	MODTECH
STKP 34	87332	PC 266	03-11-1997	36 x 40	50+20#	MODTECH
STKP 45	04-101618	PC 101268	10-07-1999	36 x 40	50+20#	MODTECH
STKP 51	04-113121	PC 04-102016	09-12-2013	36 x 40	50+20#	MODTECH
STKP 87	04-103001	PC 101268	03-01-2001	36 x 40	50#	MODTECH
STKP 65	04-104441	PC 101268	07-11-2002	36 x 40	50+20#	MODTECH
STKP 71	04-106-519	PC 104801	07-29-2004	36 x 40	50+20#	MODTECH
STKP 73	04-106585	PC 101268	03-01-2007	36 x 40	100#	MODTECH
STKP 85	04-111191	PC 79	06-03-2010	36 x 40	50+20#	MODTECH
STKP 104	04-113588	A-68118	05-01-2014	36 x 40	50+20#	MODTECH

BUILDING DATA - 48 x 40 RIGID FRAME

STKP #	DSA #	PC-BASE	DATE	SIZE	FLOOR LOAD	BLDG MFG
STKP SW	87194	PC 79	11-08-1991	48 x 40	100#	MODTECH
STKP SW	87194	PC 79	11-08-1991	48 x 40	70#	MODTECH
STKP 17	83289	PC 243	05-04-1995	48 x 40	50+20#	MODTECH
STKP 41	04-100797	PC 266	10-22-1998	48 x 40	50+20#	MODTECH
STKP 46	04-101617	PC 101268	10-07-1999	48 x 40	50+20#	MODTECH
STKP 63	04-104170	PC 101268	04-18-2002	48 x 40	50+20#	MODTECH
STKP 96	04-113418	PC 79/57194	01-30-2014	48 x 40	50+20#	MODTECH
STKP 105	04-113544	PC 04-101268	04-10-2014	48 x 40	50+20#	MODTECH

STOCKPILE CLASSROOM RELOCATION FOUNDATION PLAN & DETAILS

REVISIONS	BY
1 JAN 2015 ADD STKP 130/#131 & TOMTOM 2303.1.8.7 NOTE & SHEET C1.0	CLS

CLASS LEASING LLC

Class Leasing, LLC
1221 Harley Knox Blvd. Perris, CA 92571-7408
VOICE (951)943-5768 FAX (951)943-5768

CLASS LEASING, LLC. PC
FOUNDATION PLANS AND DETAILS
STOCKPILE CLASSROOMS RELOCATION

DATE	09-29-2014
SCALE	
DRAWN	LAM-CLLS
JOB	
SHEET	F1.0

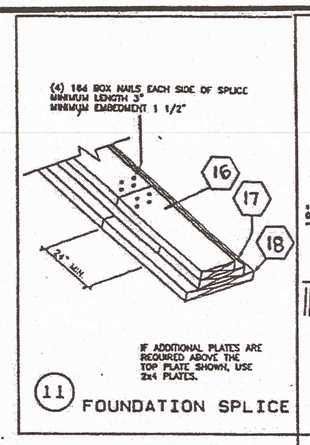

11 FOUNDATION SPLICE

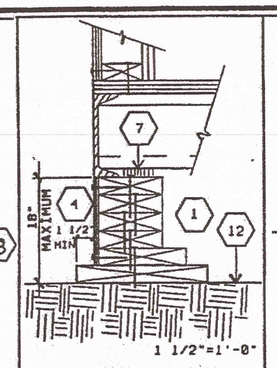

6 SIDE WALL ADDITIONAL BLOCKING

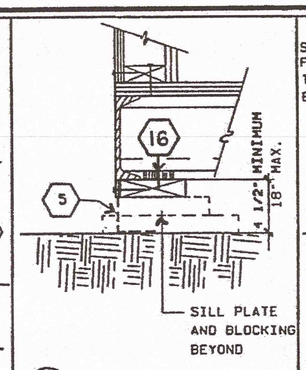

1A VENT AT SIDE WALL

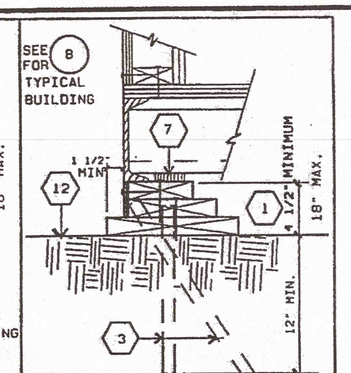

1 SIDE WALL FOUNDATION

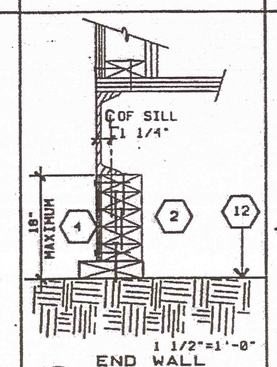

7 END WALL ADDITIONAL BLOCKING

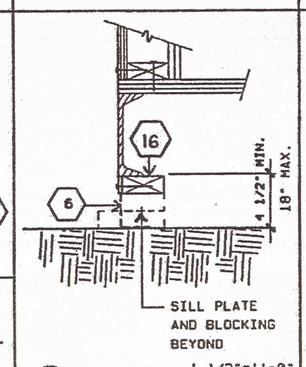

2A VENT AT END WALL

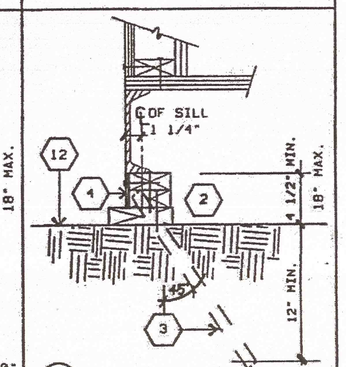

2 END WALL FOUNDATION

TYPICAL: NAILING (1) 16d BOX AT 4" O.C.

TYPICAL: PLATE TO PLATE,
PLATE TO BLOCK,
BLOCK TO BLOCK,
BLOCK TO PLATE,

MINIMUM 6-16d PER BLOCK OR PLATE

TYPICAL REFERENCES AT ALL BUILDINGS

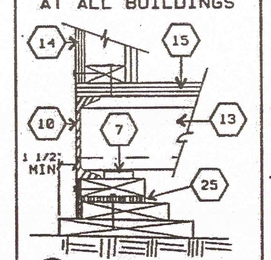

8 LEVELING SHIM WHEN REQUIRED

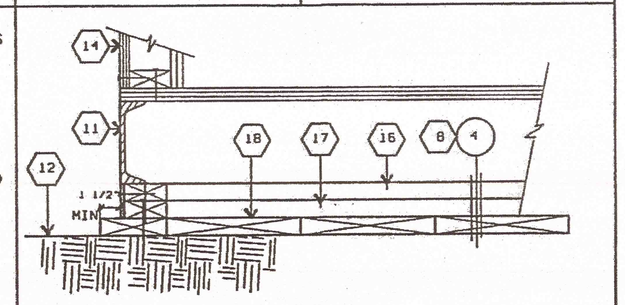

3 SECTION FND AT MODULE LINE 1 1/2"=1'-0"

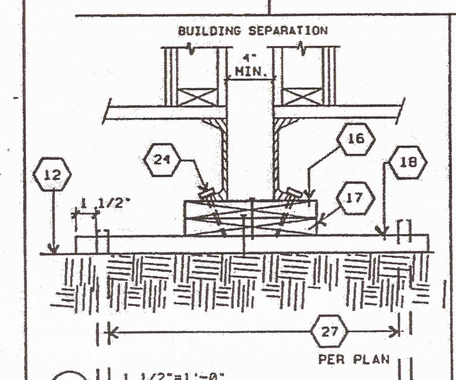

9 1 1/2"=1'-0" ADJACENT BUILDING

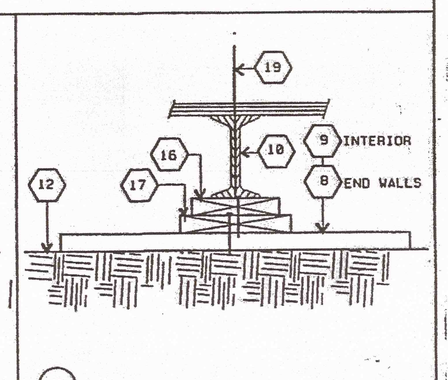

4 MODULE LINE 1 1/2"=1'-0"

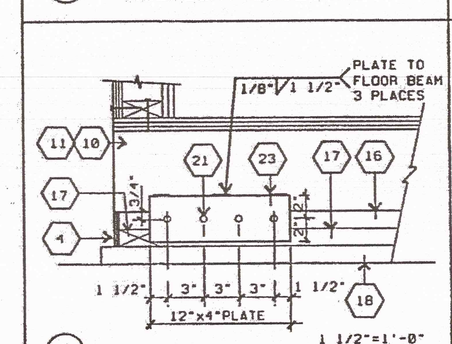

10 WELDED TIE PLATE-OPTION

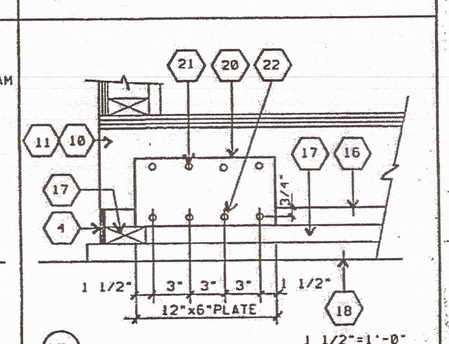

5 FOUNDATION TIE PLATE

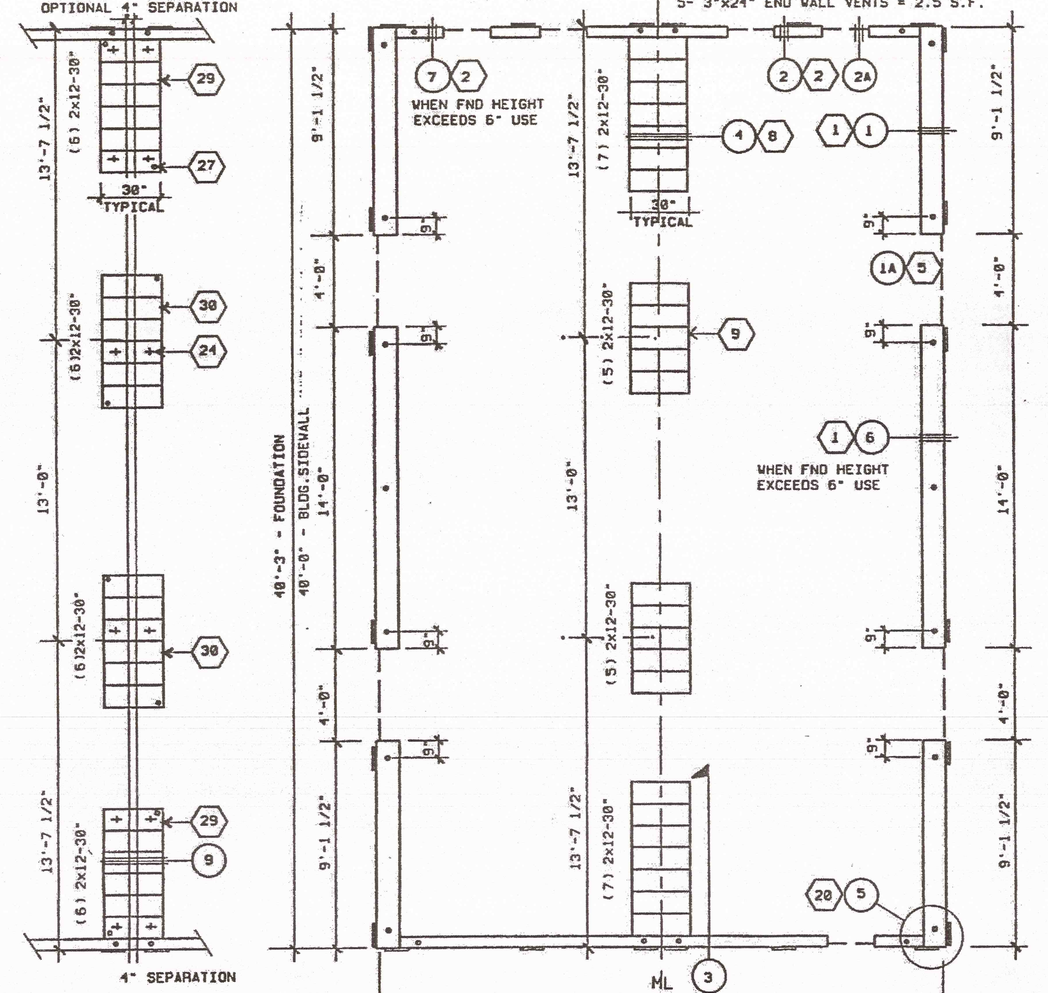

FOUNDATION PADS AT ADJACENT BUILDINGS
1/4"=1'-0"

TYPICAL 24x40 FOUNDATION PLAN 50+20-PSF

KEY NOTES 24x40- 50+20 PSF FLOOR LOAD

FOUNDATION AT SIDE WALL

1 TOP PLATE: 2x8 CONTINUOUS W/ (1) 16d NAIL AT 4" O.C. TO BLOCKING PLATE BELOW
BLOCKING: 2x8 CONTINUOUS W/ (1) 16d NAIL AT 4" O.C. TO BLOCKING OR SILL PLATE BELOW
SILL PLATE: 2x12 (PT) WITH SILL RESTRAINT PER GENERAL NOTE #A.

FOUNDATION AT END WALL

2 TOP PLATE: 2x4 CONTINUOUS W/ (1) 16d NAIL AT 4" O.C. TO BLOCKING PLATE BELOW
BLOCKING: 2x4 CONTINUOUS W/ (1) 16d NAIL AT 4" O.C. TO BLOCKING OR SILL PLATE BELOW
SILL PLATE: 2x6 (PT) WITH SILL RESTRAINT PER GENERAL NOTE #A.

3 SILL RESTRAINT- PIPE TO GRADE (TYP) SEE GENERAL NOTE #A

4 SKIRTING: 3/8" PLYWOOD, ATTACH WITH 10d NAILS, EDGE NAILING 4" O.C. AT END WALLS AND 6" O.C. AT SIDE WALLS, FIELD NAILING 12" OC

5 SIDEWALL VENT: 3" HIGH BY 4'-0" LONG. INSTALL UNDER SKIRTING.
SKIRTING ATTACH WITH 10d NAILS, EDGE NAILING 6" O.C.
6 ENDWALL VENT: 3" HIGH BY 2'-0" LONG. INSTALL UNDER SKIRTING.
SKIRTING ATTACH WITH 10d NAILS, EDGE NAILING 4" O.C.
7 SHIM: 5/8" X 2 1/2" WHEN REQUIRED

FOUNDATION AT MOD LINE / END WALL

8 TOP PLATE: 2x8 CONTINUOUS W/ (1) 16d NAIL AT 4" O.C. TO BLOCKING PLATE BELOW
BLOCKING: 2x10 CONTINUOUS W/ (1) 16d NAIL AT 4" O.C. TO BLOCKING OR SILL PLATE BELOW
SILL PLATE: (7) 2x12x30" (PT)

FOUNDATION AT MOD LINE / INTERIOR WALL

9 TOP PLATE: 2x8 CONTINUOUS W/ (1) 16d NAIL AT 4" O.C. TO BLOCKING PLATE BELOW
BLOCKING: 2x10 CONTINUOUS W/ (1) 16d NAIL AT 4" O.C. TO BLOCKING OR SILL PLATE BELOW
SILL PLATE: (5) 2x12x30" (PT)

10 FLOOR BEAM: C7x 9.8 TYPICAL
11 FLOOR HEADER: C7x 9.8 TYPICAL
12 FINISH GRADE
13 FLOOR JOIST
14 EXTERIOR FINISH
15 PLYWOOD SUB-FLOOR
16 TOP PLATE: CONTINUOUS
17 BLOCKING
18 SILL PLATE
19 MODLINE --
20 TIE PLATE: 12" x 6" x 10 GA
21 PLATE ANCHOR: 4 -1/4" ϕ S.M.S. (1 1/2" MIN. EMBEDMENT)
22 PLATE ANCHOR: 4 -1/4" x 2" LONG LAG SCREWS (1 1/2" MIN. EMBEDMENT)
23 TIE PLATE: 12" x 4" x 10 GA
24 BUILDING ANCHORAGE: 6- 5/8"x4" LAGS SCREWS AT EACH BUILDING (FOR LOCATION SEE PLAN AT ADJACENT BUILDINGS)
25 LOCATION OF SHIM PLATES WHERE REQUIRED FOR LEVELING USE 1/4", 1/2" OR 3/4" PLYWOOD AT SAME WIDTH AS PLATE. NAIL SHIM TO PLATE WITH (6)-10d BOX.
26 2" CUTOUT OF SILL PLATE FOR DRAINAGE. FIELD TO LOCATE AT LOWEST CORNER OF FOUNDATION.
27 1" PIPE EACH END OF PAD AT ADJACENT BUILDING LINE.
28 THIS VENT TO BE LOCATED UNDER LANDING.
PROVIDE EQUAL AREA SCREENED VENTILATION IN LANDING SKIRT.

FOUNDATION AT BUILDING SEPARATION / END WALL

29 TOP PLATE: 2x8 CONTINUOUS W/ (1) 16d NAIL AT 4" O.C. TO BLOCKING PLATE BELOW
BLOCKING: 2x10 CONTINUOUS W/ (1) 16d NAIL AT 4" O.C. TO BLOCKING OR SILL PLATE BELOW
SILL PLATE: (6) 2x12x30" (PT) WITH SILL RESTRAINT PER PLAN AND NOTE 24.

FOUNDATION AT BUILDING SEPARATION / INTERIOR WALL

30 TOP PLATE: 2x8 CONTINUOUS W/ (1) 16d NAIL AT 4" O.C. TO BLOCKING PLATE BELOW
BLOCKING: 2x10 CONTINUOUS W/ (1) 16d NAIL AT 4" O.C. TO BLOCKING OR SILL PLATE BELOW
SILL PLATE: (6) 2x12X30" (PT) WITH SILL RESTRAINT PER PLAN AND NOTE 24.

GENERAL NOTES

A. SILL RESTRAINT: THE FOUNDATION SHALL BE DESIGNED TO PREVENT SLIDING ON THE SUPPORTING SURFACE (ASPHALT CONCRETE PAVING OR ON SOIL OR ON PRE-DRILLED CONCRETE SLAB ON GRADE) BY ATTACHING THE WOOD FOUNDATION PLATES FOR THE BUILDING, RAMPS AND STAIRS TO THE GROUND WITH RESTRAINING DEVICES.

USE A ONE-INCH DIAMETER STANDARD WEIGHT (1.315" ACTUAL O.D.) HOT DIPPED GALVANIZED PIPE OR ONE-INCH DIAMETER SOLID STEEL ROD SPACED AT NOT MORE THAN 10'-0". ONE PIPE/ROD SHALL BE LOCATED A MAXIMUM OF TWO FEET FROM EACH CORNER IN BOTH DIRECTIONS AND A MINIMUM OF TWO PIPES/RODS PER DISCONTINUOUS FOUNDATION STRIP.

PIPES TO PENETRATE INTO SOIL AND OR PAVING A MINIMUM OF 12" MEASURED VERTICALLY. 18-1/2" LONG PIPE REQUIRED FOR PENETRATION AT A 45 DEGREE ANGLE.

B. TO PREVENT WATER FROM PONDING BENEATH THE STRUCTURE VERIFY DRAINAGE WITH DISTRICT ARCHITECT SITE PLANS.

C. A WOOD SILL (FOOTING) PLATE SHALL BE PRESSURE TREATED HEM FIR OR DOUG FIR AND MAY BEAR DIRECTLY ON SOIL OR PAVED SURFACE. GRASS OR TURF SHALL BE CLEARED TO BARE SOIL UNDER THE ENTIRE AREA OF THE BUILDING (BY DISTRICT). THE WOOD SILL (FOOTING) PLATE MAY SUPPORT WOOD CRIPPLE STUDS, POSTS OR CONTINUOUS BLOCKING AND SHEATHING (SKIRT) WHICH NEED NOT BE TREATED. FOUNDATION LUMBER TO BE PRECUT AT FACTORY. LUMBER AND PRESSURE TREATING TO BE VERIFIED BY THE INSPECTOR

D. FOUNDATION DESIGNED FOR 1000 PSF SOIL BEARING PRESSURE

E. THIS FOUNDATION PLAN HAS 1/4" ADDED AT EACH MODLINE AND 1/8" AT EACH SIDE WALL AND DOES NOT MATCH THE FLOOR PLAN DIMENSIONS, THIS IS REQUIRED FOR GROWTH THAT IS EXPERIENCED WHEN SETTING MULTIPLE MODULE BUILDINGS.

F. MACHINE APPLIED 16d FASTENERS SHALL HAVE AN EMBEDMENT OF NOT LESS THAN 1 1/2" INTO SECOND MEMBER, AND SHALL BE NOT LESS THAN 3 1/2" IN OVERALL LENGTH

G. THE ABOVE NAILS SHALL ALSO BE ACCEPTABLE FOR HAND NAILING PROVIDED THE REQUIRED EMBEDMENT IS MAINTAINED.

IDENTIFICATION STAMP
DIV. OF THE STATE ARCHITECT
03 118412
AC ✓ FLS ✓ SS TB
Date SEP 0 6 2017

IDENTIFICATION STAMP
DIV. OF THE STATE ARCHITECT
04 115204
ACS ✓ FLS ✓ SS RAF
DATE APR 14 2016

PRE-CHECK (PC) DOCUMENT
CODE: 2013 CBC
A SEPARATE PROJECT APPLICATION FOR CONSTRUCTION IS REQUIRED

IDENTIFICATION STAMP
DIV. OF THE STATE ARCHITECT
OFFICE OF REGULATION SERVICES
PC 04-113776
AC ✓ FLS ✓ SS ✓
DATE OCT 0 8 2014

SEP 30 2014

REGISTERED PROFESSIONAL ENGINEER JACK F. SHIVELY III No. 3602 STRUCTURAL STATE OF CALIFORNIA
LICENSE EXPIRES 6-30-2016

LICENSED ARCHITECT JACK F. SHIVELY III No. C-33466 STATE OF CALIFORNIA
JAN 31 2017 RENEWAL DATE

24x40 - 50+20 PSF STOCKPILE CLASSROOM RELOCATION FOUNDATION PLAN & DETAILS

REVISIONS	BY

CLASS LEASING LLC

Class Leasing, LLC
1221 Harley Knox Blvd. Perris, CA 92571-7408
VOICE (951)943-1908 FAX (951)943-5768

CLASS LEASING, INC.
STOCKPILE CLASSROOM
24x40 - 50+20 PSF RELOCATION
FOUNDATION PLAN & DETAILS

DATE	09-29-2014
SCALE	
DRAWN	LAM-CLLS
JOB	24x40 50+20 PSF
SHEET	F2.1

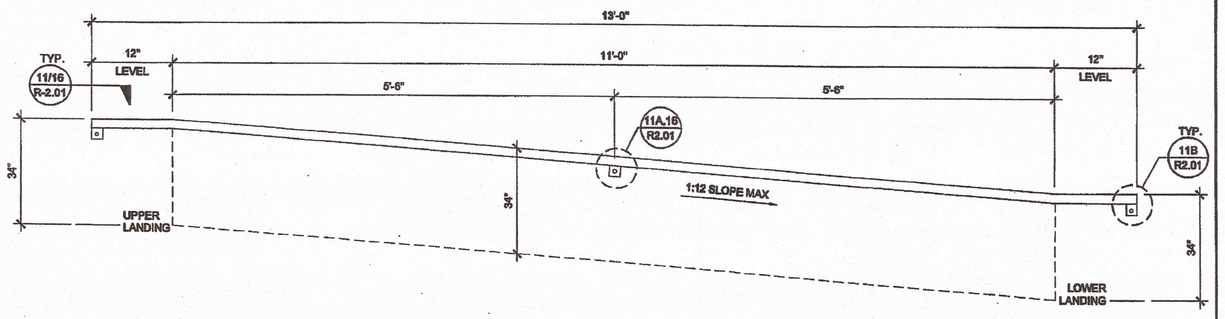

HANDRAIL ATTACHMENT TO BUILDING — SCALE : 1" = 1'-0" — 6

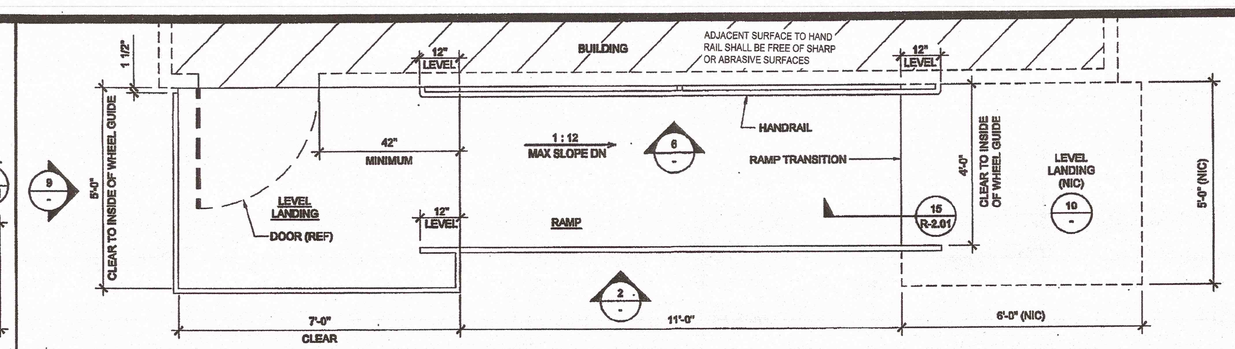

RAMP AND LANDING AT BUILDING — SCALE : 1/2" = 1'-0" — 1

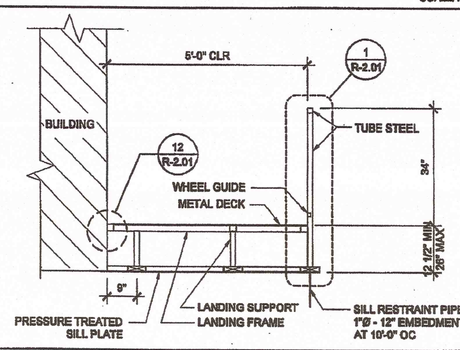

11 SECTION AT LANDING — SCALE : 1/2" = 1'-0" — 7

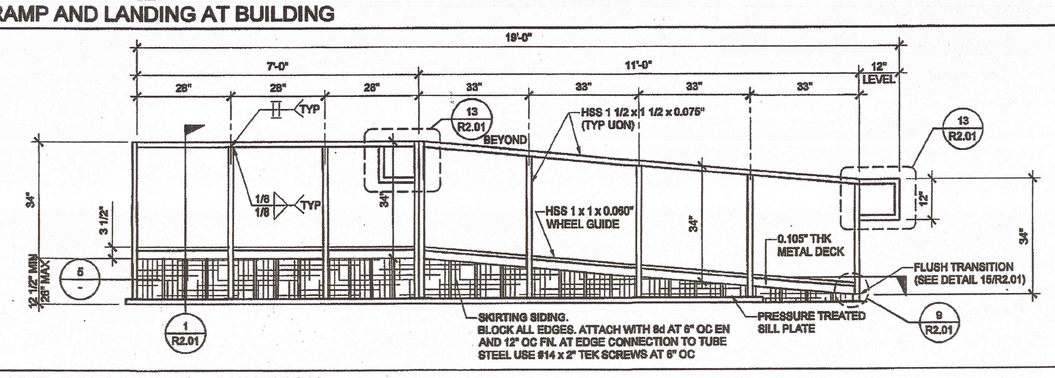

RAMP AND LANDING ELEVATION — SCALE : 1/2" = 1'-0" — 2

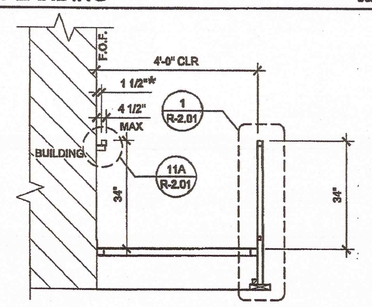

NOTE (a)
1. ALL SURFACES SHALL BE SMOOTH WITH NO SHARP CORNERS, PER CBC 1133.5.5.1 WALL TO BE SMOOTH AND TO EXTEND ABOVE HANDRAIL

12 SECTION AT RAMP — SCALE : 1/2" = 1'-0" — 8

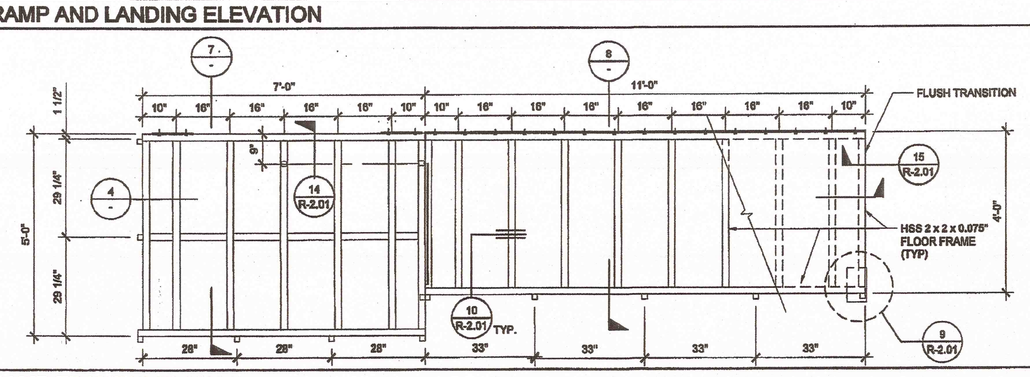

RAMP FRAMING PLAN — SCALE : 1/2" = 1'-0" — 3

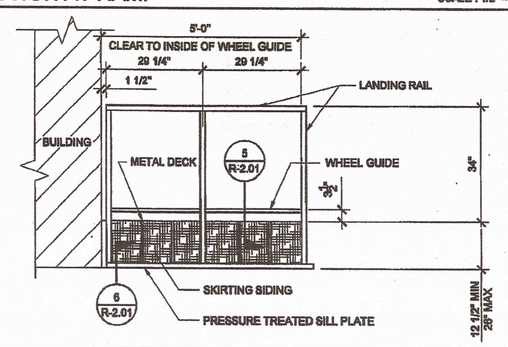

13 LANDING ELEVATION — SCALE : 1/2" = 1'-0" — 9

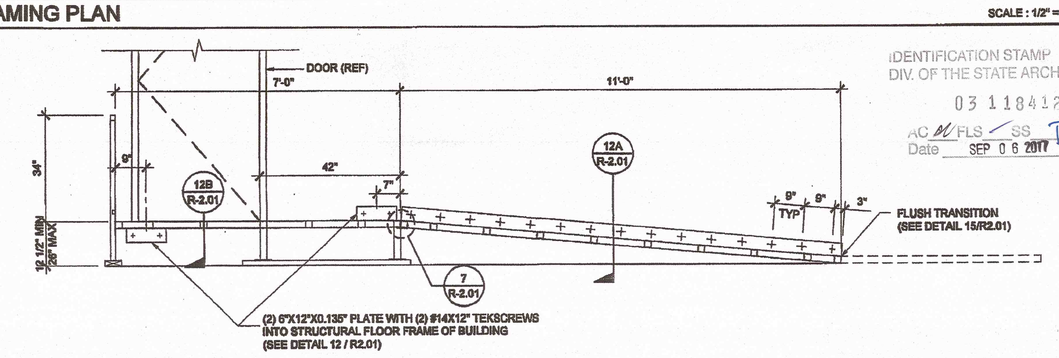

IDENTIFICATION STAMP
DIV. OF THE STATE ARCHITECT
03 118412
AC FLS SS
Date SEP 06 2017

SECTION AT RAMP AND LANDING — SCALE : 1/2" = 1'-0" — 4

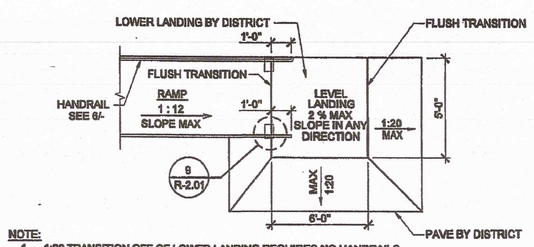

NOTE:
1. 1:20 TRANSITION OFF OF LOWER LANDING REQUIRES NO HANDRAILS.
2. TRANSITIONS EXCEEDING 1:20 BUT NOT TO EXCEED 1:12 REQUIRE REMOVAL OF 12" HANDRAIL EXTENSION AND ADDITIONAL HANDRAILING BY DISTRICT.
THIS CONDITION REQUIRES A SITE SPECIFIC DETAIL PROVIDED BY ARCHITECT TO DEMONSTRATE ACCESSIBLE RAMP.

14 RAMP TRANSITION — SCALE: NTS — 10

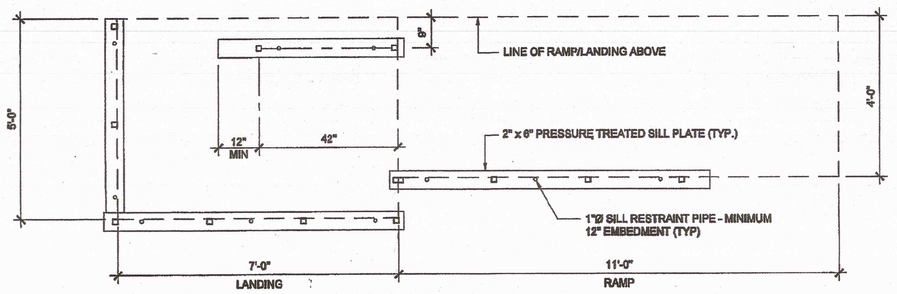

SILL PLAN FOR RAMP AND LANDING — SCALE : 1/2" = 1'-0" — 5

SILVER CREEK INDUSTRIES, INC.
"BUILDING FOR THE NEXT GENERATION"
SILVER CREEK
195 EAST MORGAN PERRIS, CALIFORNIA 92571
PHONE: 951-943-5393 FAX: 951-943-2211

PROJECT NAME:

CLASS LEASING
CLASSROOM BLDG'S

SHEET TITLE:

RAMP LANDING

TAVARES & ASSOCIATES
STRUCTURAL ENGINEERS
811 SANTA FE, SUITE 100 TEL 760.323.3514
2555 CAMINO DEL RIO, SUITE 100 TEL 619.295.0929
www.tavaresassociates.com

REVISED
FEB 26 2015

IDENTIFICATION STAMP
DIV. OF THE STATE ARCHITECT
OFFICE OF REGULATION SERVICES
04 113992
AC FLS SS
DATE NOV 20 2014

No. C-35594
RED: 10-31-2013
12/23/2011

ARCHITECT OF RECORD
IDENTIFICATION STAMP
DIV. OF THE STATE ARCHITECT
OFFICE OF REGULATION SERVICES
04 113949
AC DN
DATE NOV 18 2014

REGISTERED ARCHITECT
JEFFREY A. McCLIFTON
C10322
6-30-16
STATE OF CALIFORNIA

PROJECT SPECIFIC STATE AGENCY APPROVAL

IDENTIFICATION STAMP
DIV. OF THE STATE ARCHITECT
OFFICE OF REGULATION SERVICES
04 113536
AC FLS
DATE APR 04 2014

ORIGINAL PC STATE AGENCY APPROVAL

PRECHECK/PC DOCUMENT CODE/PRO DOC
A.SERVATE PROJECT APPLICATION
PC/PRE/PRO/PRA/A.S.PA/PRO

IDENTIFICATION STAMP
DIV. OF THE STATE ARCHITECT
OFFICE OF REGULATION SERVICES
PC 04-112072
AC RS SS
DATE DEC 19 2011

REVISIONS
1
2
3
4
5
6
7
8

SILVER CREEK INDUSTRIES
24' x 40' PC

PROJECT NO:	
DRAWN BY:	
SCALE:	AS NOTED
DATE:	12-23-11
P.C. SHEET NUMBER	R-1.01
	STKP 126

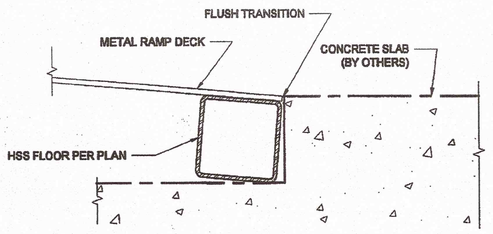

FLUSH TRANSITION AT BOTTOM OF RAMP SCALE : 6" = 1'-0" 15

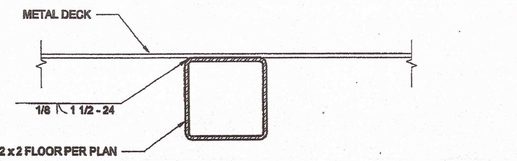

DECK TO FRAME SCALE : 6" = 1'-0" 10

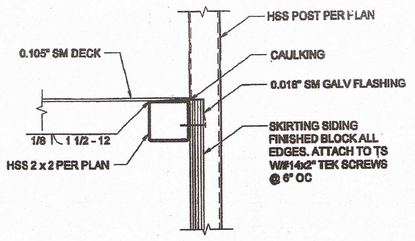

SKIRT FLASHING SCALE : 3" = 1'-0" 5

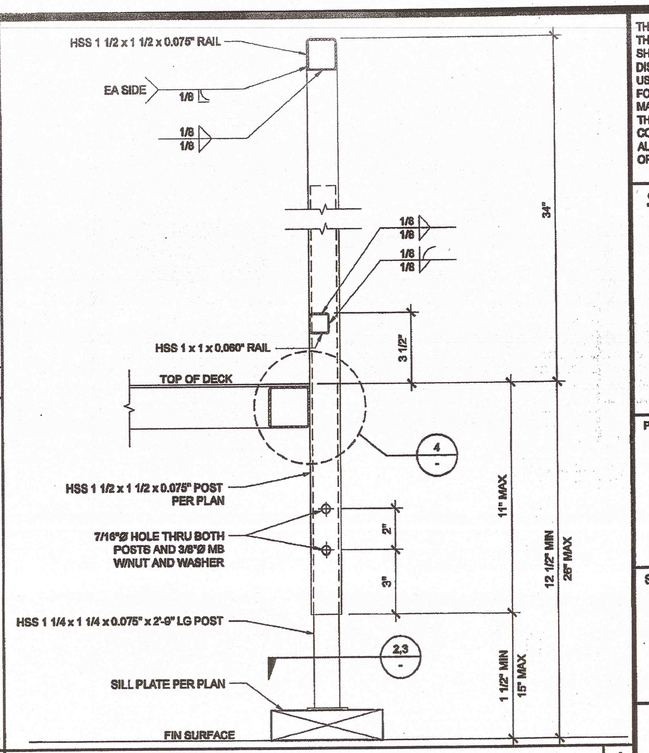

ADJUSTABLE LEG SCALE : 3" = 1'-0" 1

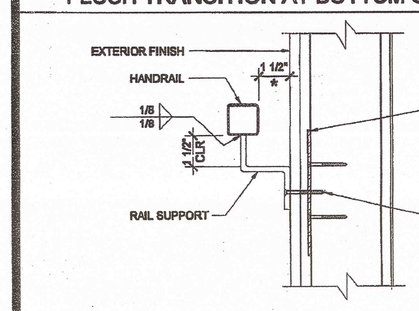

NOTE (s)
1. ALL SURFACES SHALL BE SMOOTH WITH NO SHARP CORNERS, PER CBC 1133B.5.5 WALL TO BE SMOOTH AND TO EXTEND 6" ABOVE HANDRAIL

HANDRAIL CONNECTION AT SHEETMETAL BLKG SCALE : 3" = 1'-0" 16

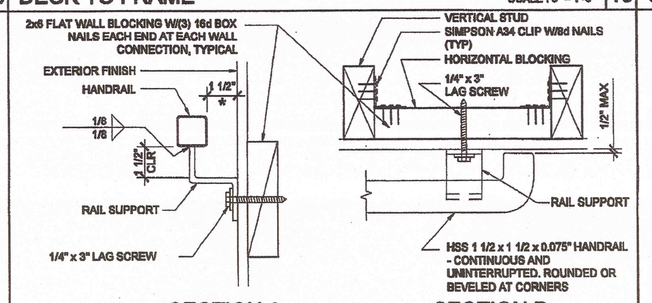

NOTE (s)
1. ALL SURFACES SHALL BE SMOOTH WITH NO SHARP CORNERS, PER CBC 1133B.5.5 WALL TO BE SMOOTH AND TO EXTEND 6" ABOVE HANDRAIL

HANDRAIL CONNECTION AT WOOD BLOCKING SCALE : 3" = 1'-0" 11

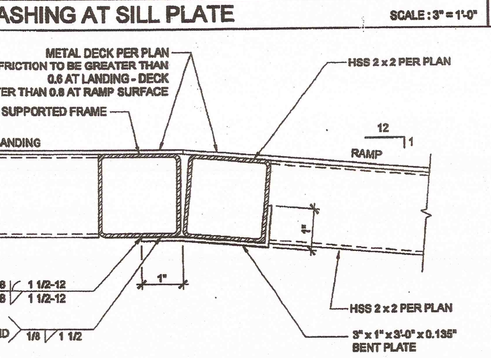

SKIRT FLASHING AT SILL PLATE SCALE : 3" = 1'-0" 6

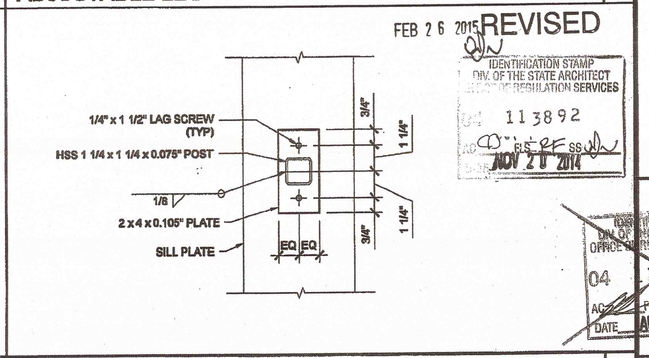

ADJUSTABLE LEG BASE PLATE SCALE : 3" = 1'-0" 2

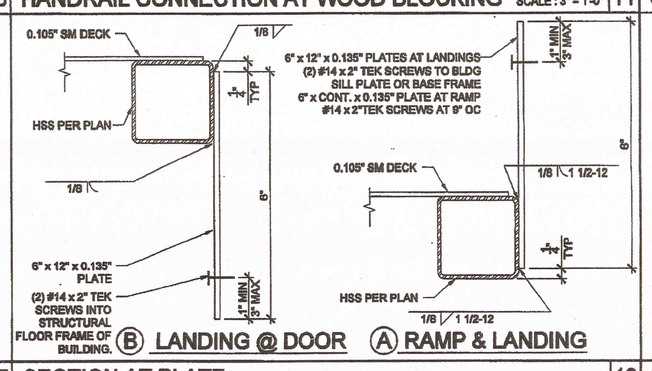

SECTION AT PLATE SCALE : 6" = 1'-0" 17

RAMP AT LANDING SCALE : 6" = 1'-0" 12

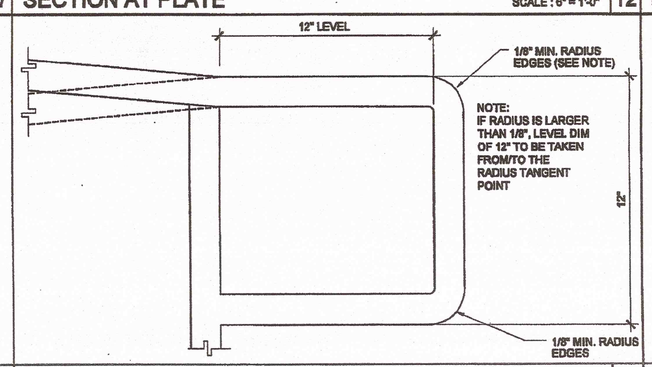

EXTEND HANDRAIL @ TOP OR BOTT. ENDS SCALE : 3" = 1'-0" 13

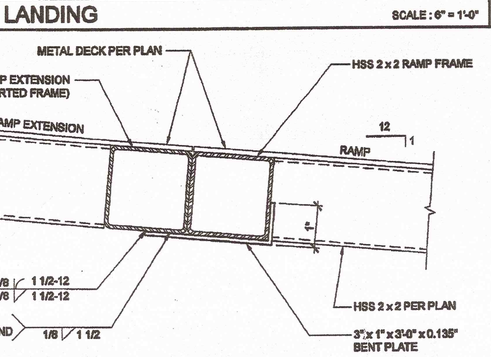

RAMP EXTENSION SCALE : 6" = 1'-0" 8

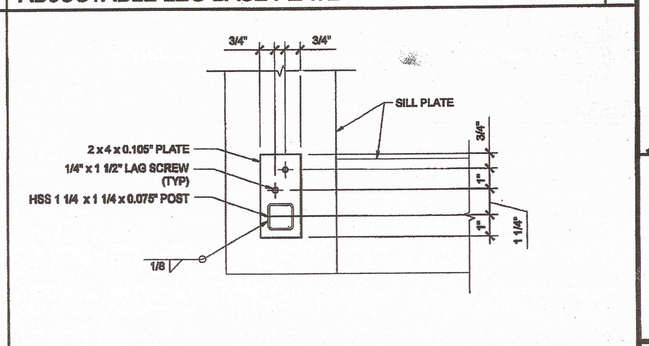

ADJUSTABLE LEG BASE PLATE SCALE : 3" = 1'-0" 3

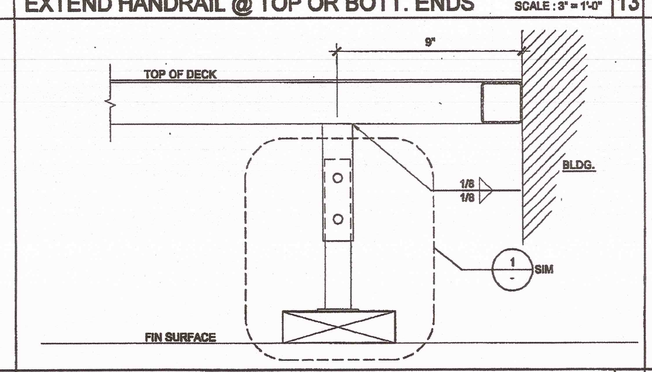

INTERIOR LANDING LEG SECTION SCALE : 3" = 1'-0" 14

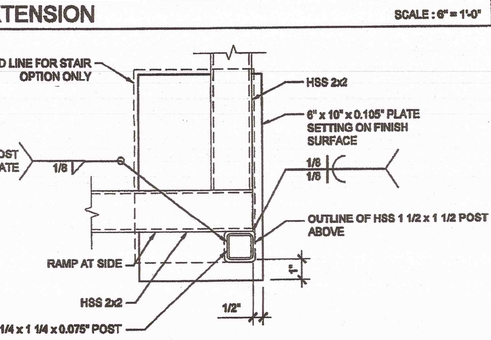

BASE PLATE AT RAMP TOE SCALE : 3" = 1'-0" 9

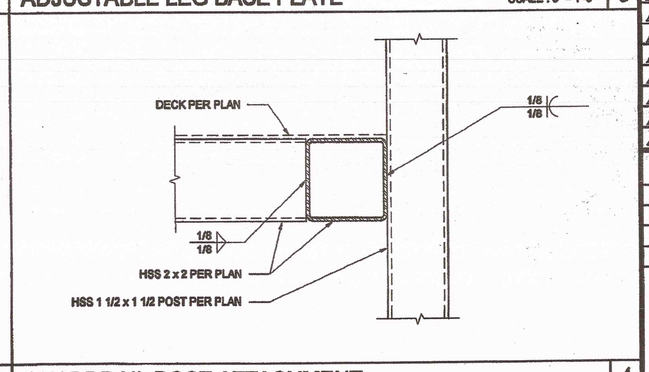

GUARDRAIL POST ATTACHMENT SCALE : 6" = 1'-0" 4

SILVER CREEK INDUSTRIES, INC.
"BUILDING FOR THE NEXT GENERATION"
SILVER CREEK
195 EAST MORGAN PERRIS, CALIFORNIA 92571
PHONE: 951-943-5393 FAX: 951-943-2211

PROJECT NAME:

CLASS LEASING CLASSROOM BLDG'S

SHEET TITLE:

RAMP DETAILS

TAVARES ASSOCIATES
STRUCTURAL ENGINEERS
12/23/2011

ARCHITECT OF RECORD SUBMISSION DATE

REVISED FEB 26 2015

IDENTIFICATION STAMP DIV. OF THE STATE ARCHITECT OFFICE OF REGULATION SERVICES 113892 JUN 20 2014

IDENTIFICATION STAMP DIV. OF THE STATE ARCHITECT OFFICE OF REGULATION SERVICES 04 11949 AUG 28 2014

PROJECT SPECIFIC STATE AGENCY APPROVAL

IDENTIFICATION STAMP DIV. OF THE STATE ARCHITECT OFFICE OF REGULATION SERVICES 04 113892 NOV 04 2014

ORIGINAL PC STATE AGENCY APPROVAL

PRE-CHECK (PC) DOCUMENT A SUPPORTIVE PROJECT APPROACH FOR CONSTRUCTION STANDARDS

IDENTIFICATION STAMP DIV. OF THE STATE ARCHITECT OFFICE OF REGULATION SERVICES PC 04-112072 DEC 30 2014

REVISIONS

SILVER CREEK INDUSTRIES 24' x 40' PC

PROJECT NO:
DRAWN BY:
SCALE: AS NOTED
DATE: 12-23-11

P.C. SHEET NUMBER R-2.01

STKP 126

IDENTIFICATION STAMP DIV. OF THE STATE ARCHITECT 03 110412 AC FLS SS TB Date SEP 05 2017