## GENERAL

TYPICAL DETAILS AND GENERAL NOTES SHALL APPLY IN ALL CASES UNLESS SPECIFICALLY SHOWN OTHERWISE ON THE DRAWINGS. WHERE NO DETAIL IS SHOWN, CONSTRUCTION SHALL BE AS SHOWN FOR OTHER SIMILAR WORK. NO DEVIATIONS FROM THE DRAWINGS SHALL BE PERMITTED WITHOUT PERMISSION OF THE ENGINEER. SEE NON-STRUCTURAL DRAWINGS AND SPECIFICATIONS FOR ITEMS NOT SHOWN ON THE STRUCTURAL DRAWINGS.

THE CONTRACTOR SHALL:

1. VERIFY ALL (E) EXISTING CONDITIONS AND DIMENSIONS AND REPORT ANY DIFFERENCES IN ASSUMED CONDITIONS TO THE ENGINEER PRIOR TO PROCEEDING.
2. PROVIDE AND BE SOLELY RESPONSIBLE FOR ALL TEMPORARY SHORING, GUYS AND BRACING NECESSARY FOR STRUCTURAL WORK SHOWN ON THESE DRAWINGS.
3. PERFORM ALL WORK AND RECEIVE ALL TESTS AND INSPECTIONS IN ACCORDANCE WITH THE PROJECT DRAWINGS, SPECIFICATIONS, THE "STRUCTURAL TESTS AND INSPECTIONS" SCHEDULE AND THE C.B.C. UNDER THE CONTINUOUS INSPECTION OF A DIVISION OF THE STATE ARCHITECT (D.S.A.) APPROVED PROJECT INSPECTOR. THE DUTIES OF THE PROJECT INSPECTOR SHALL BE AS DEFINED IN SECTION 4-219, PART 1, TITLE 24 OF THE C.C.R..
4. BE SOLELY RESPONSIBLE FOR CONDITIONS AT THE JOB SITE, INCLUDING SAFETY OF ALL PERSONS AND PROPERTY.
5. PERFORM ALL DEMOLITION, REMOVAL AND DISPOSAL IN CONFORMANCE WITH ALL APPLICABLE LAWS, ORDINANCES, RULES AND REGULATIONS. EXCESS MATERIAL SHALL BE REMOVED FROM THE SITE AND DISPOSED OF OFF SITE UNLESS OTHERWISE DIRECTED BY THE ARCHITECT.

SUPPORT SERVICES PERFORMED BY THE ENGINEER DURING CONSTRUCTION SHALL BE DISTINGUISHED FROM CONTINUOUS AND DETAILED INSPECTION SERVICES THAT ARE FURNISHED BY OTHERS. THE SUPPORT SERVICES PERFORMED BY THE ENGINEER, ARE PERFORMED SOLELY FOR THE PURPOSE OF ASSISTING IN QUALITY CONTROL AND IN ACHIEVING CONFORMANCE WITH THE CONTRACT DRAWINGS AND SPECIFICATIONS. THESE SUPPORT SERVICES DO NOT GUARANTEE THE CONTRACTOR'S PERFORMANCE AND SHALL NOT BE CONSTRUED AS SUPERVISION OF CONSTRUCTION.

## NOTIFICATION & STRUCTURAL OBSERVATIONS

THE DSA APPROVED INSPECTOR SHALL NOTIFY THE STRUCTURAL ENGINEER TWO (2) WORKING DAYS PRIOR TO:

1. START OF CONSTRUCTION.
2. PLACING CONCRETE.

## FOUNDATION

FOUNDATIONS AND SLABS SHALL BE PLACED ONLY ON FIRM BEARING AND NOT ON UNCOMPACTED FILL. THE GEOTECNICAL ENGINEER SHALL IDENTIFY SOIL TYPE AND APPROVE SUBGRADES PRIOR TO THE PLACEMENT OF REINFORCING STEEL.

SOIL TYPE . . . . . SILTY SAND
BASIC ALLOWABLE BEARING PRESSURE . . . . . 1000 LBS/SF

THE UPPER FOOT OF SUBGRADE BELOW FOUNDATIONS AND SLABS SHALL BE COMPACTED TO NOT LESS THAN 90% OF THE MAXIMUM DRY DENSITY AS DEFINED BY ASTM D 1557-78.
THE BACKFILL ABOVE THE FOUNDATION AND BELOW SLABS SHALL BE COMPACTED TO NOT LESS THAN 90% OF THE MAXIMUM DRY DENSITY AS DEFINED BY ASTM D 1557-78.

## REINFORCING

MATERIALS SHALL BE CONTINUOUS, DEFORMED BARS CONFORMING TO ASTM A615:
#4 BARS & SMALLER . . . . . GRADE 40
#5 BARS & LARGER . . . . . GRADE 60

CONTINUOUS BAR SPLICES SHALL BE STAGGERED AT 4' - 0" O.C. AND BE:
CONCRETE
#4 BARS & SMALLER . . . . . 48 BAR DIAMETERS
#5 & #6 BARS . . . . . 66 BAR DIAMETERS

CONCRETE COVERAGE FOR REINFORCEMENT SHALL BE:
CAST AGAINST EARTH & PERMANENTLY EXPOSED TO EARTH . . . . . 3"
CAST AGAINST FORMS & PERMANENTLY EXPOSED TO EARTH OR WEATHER . . . . . 2"
CAST AGAINST FORMS & NOT PERMANENTLY EXPOSED TO EARTH OR WEATHER:
SLABS, WALLS & JOISTS . . . . . 3/4"
BEAMS, GIRDERS & COLS. . . . . 1-1/2"

## CONCRETE

MATERIALS SHALL CONFORM TO THE FOLLOWING SPECIFICATIONS:
PORTLAND CEMENT (ONE BRAND, TYPE V) . . . . . ASTM C150
WATER . . . . . DOMESTIC SUPPLY
AGGREGATES (FINE & COARSE) . . . . . ASTM C33
(AGGREGATES SHALL CONTAIN NOT MORE THAN 2% SHALE OR OTHER DELETERIOUS PARTICLES.)
ADMIXTURE (TYPE A, WATER REDUCING) . . . . . ASTM C494
CURING COMPOUND . . . . . ASTM C309
(SHALL NOT IMPAIR IN ANY WAY THE APPLICATION OF FINISHES, COVERINGS OR PAINT)

CONTRACTOR SHALL SUBMIT A DESIGN MIX, SPECIFICALLY PREPARED FOR THIS PROJECT AND APPROVED BY A CALIFORNIA LICENSED CIVIL ENGINEER, TO THE ARCHITECT FOR REVIEW 15 WORKING DAYS PRIOR TO PLACEMENT. THE MIX DESIGN SHALL COMPLY WITH CBC SECTION 1905A.2, METHOD "B" OR "C". THE CONCRETE SHALL BE REGULAR WEIGHT (145 LBS.) AND THE MIX SHALL CONFORM TO THE FOLLOWING:

MINIMUM ULTIMATE COMPRESSIVE STRENGTH @ 28 DAYS . . . . 3000 PSI
MAXIMUM SLUMP (PER ASTM C-143) . . . . . 4 INCHES
MAXIMUM AGGREGATE SIZE . . . . . 1 INCH
MINIMUM CEMENT CONTENT . . . . . 5.0 SACKS/CY
MAXIMUM WATER/CEMENT RATIO . . . . . .50

CONCRETE SLABS AND WALLS SHALL NOT BE PLACED SOONER THAN 24 HOURS AFTER THE CONCRETE FOUNDATIONS HAVE BEEN PLACED. COLD JOINTS SHALL OCCUR WHERE SHOWN ON THE DRAWINGS.

## ABBREVIATIONS

| | | | |
|---|---|---|---|
| A.B. | = ANCHOR BOLT | # | = POUND OR NUMBER |
| ARCH. | = ARCHITECTURAL DRAWINGS | MAX. | = MAXIMUM |
| BLKG. | = BLOCKING | MECH. | = MECHANICAL |
| B.N. | = BOUNDARY NAILING | MFGR. | = MANUFACTURE |
| BM. | = BEAM | MIN. | = MINIMUM |
| BRG. | = BEARING | MISC. | = MISCELLANEOUS |
| BEL. | = BELOW | M.L. | = "MICROLLAM" MEMBER |
| C.I.P. | = CAST IN PLACE | N.S. | = NEAR SIDE |
| C.J. | = CONTROL JOINT OR CEILING JOIST | N.T.S. | = NOT TO SCALE |
| CLR. | = CLEAR | O.C. | = ON CENTER |
| COL. | = COLUMN | PLYWD. | = PLYWOOD |
| CONC. | = CONCRETE | P.S.L. | = "PARALLAM" MEMBER |
| CONT. | = CONTINUOUS (SPLICE ONLY AS DETAILED) | P.T. | = PRESSURE TREATED |
| CTSK. | = COUNTER SINK | R.R. | = ROOF RAFTER |
| (C= ) | = CAMBER | RF. | = ROOF |
| d | = PENNY | S.A. | = STUD ANCHOR |
| EA. | = EACH | SHTG. | = SHEATHING |
| E.F. | = EACH FACE | SIM. | = SIMILAR |
| E.J. | = EXPANSION JOINT | S.M.S. | = SHEET METAL SCREW |
| E.N. | = PLYWOOD EDGE NAIL | SPEC. | = SPECIFICATION |
| E.W. | = EACH WAY | SQ. | = SQUARE |
| (E) | = EXISTING | STL. | = STEEL |
| F.F. | = FINISH FLOOR | SYM. | = SYMMETRICAL |
| F.G. | = FINISH GRADE | TEMP. | = TEMPORARY |
| F.O.C. | = FACE OF CONCRETE | T.N. | = TOE NAIL |
| F.O.F. | = FACE OF FINISH | T.O.P. | = TOP OF PARAPET |
| F.O.M. | = FACE OF MASONRY | T.O. SHTG. | = TOP OF WOOD SHEATHING (OR METAL DECKING) |
| F.O.S. | = FACE OF STUD | T.O. STL. | = TOP OF STEEL |
| F.O.SHTG. | = FACE OF SHEATHING | T.O.W. | = TOP OF WALL |
| F.O.STL. | = FACE OF STEEL | U.N.O. | = UNLESS NOTED OTHERWISE |
| F.O.W. | = FACE OF WALL | V.B. | = VAPOR BARRIER OR RETARDER |
| F.S. | = FAR SIDE | VERT. | = VERTICAL |
| FTG. | = FOOTING | W/ | = WITH |
| GLB. | = GLUE LAMINATED BEAM | WWF | = WELDED WIRE FABRIC |
| HORIZ. | = HORIZONTAL | | = DOWNWARD DIRECTION OF SLOPE |
| L.L.H. | = LONG LEG HORIZONTAL | | |
| L.L.V.. | = LONG LEG VERTICAL | X-X" | = ELEVATION |

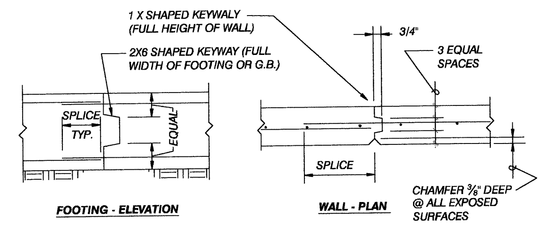


4 S1.01 CONCRETE CONSTRUCTION JOINTS (NTS)

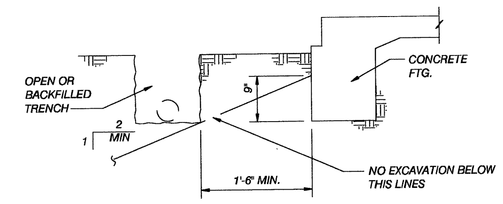


5 S1.01 TRENCH - FOOTING CLEARANCE (NTS)

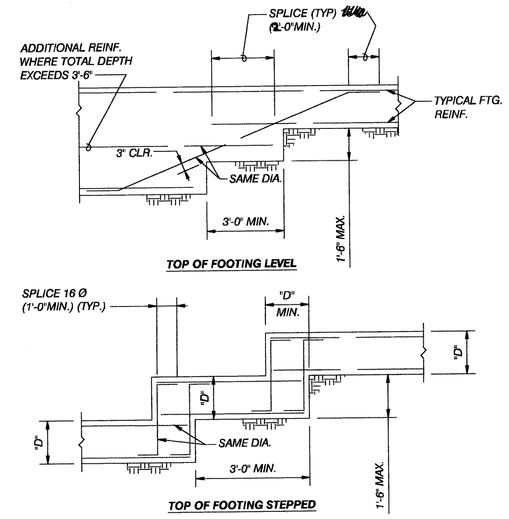


1 S1.01 STEP FOOTINGS (NTS)

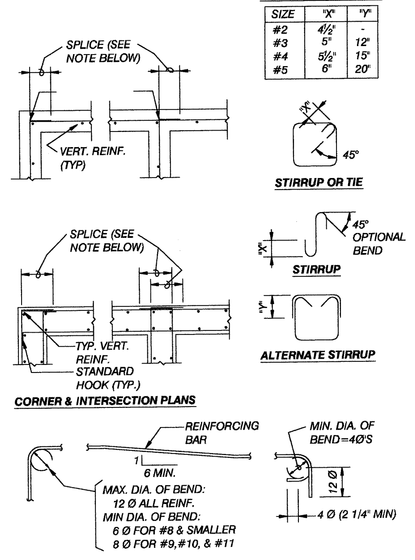


STIRRUP DIMENSIONS

| SIZE | "X" | "Y" |
|---|---|---|
| #2 | 4½" | - |
| #3 | 5" | 12" |
| #4 | 5½" | 15" |
| #5 | 6" | 20" |

NOTES

1. SEE REINFORCING SPECIFICATONS FOR CONCRETE COVERAGE AND SPLICE LENGTH.
2. PROVIDE BOND BEAM CUT-OUTS IN FACE SHELLS OF CONC. BLOCK @ EA. REBAR.
3. CORNER BARS MAY BE USED IN-LIEU-OF BENT BARS AS SHOWN.

2 S1.01 REINFORCING (NTS)

NOTE:
FOUNDATION CONCRETE MAY BE PLACED DIRECTLY INTO NEAT EXCAVATIONS PROVIDED THE FOUNDATION TRENCH WALLS ARE STABLE AS DETERMINED BY THE STRUCTURAL ENGINEER & SUBJECT TO THE APPROVAL OF THE DIVISION OF THE STATE ARCHITECT. IN SUCH CASE THE MINIMUM FORMWORK SHOWN ON THE DRAWINGS IS MANDATORY TO INSURE CLEAN EXCAVATIONS IMMEDIATELY PRIOR TO AND DURING THE PLACING OF CONCRETE.

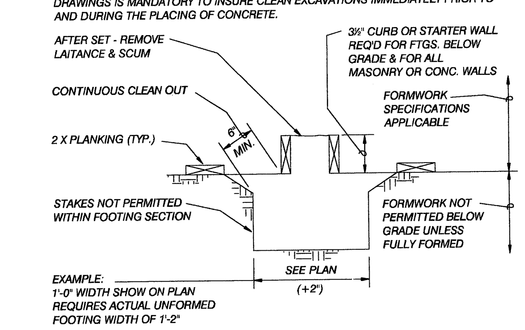


3 S1.01 UNFORMED FOOTING (NTS)


bfgc Architecture

Bakersfield
5500 ming avenue, suite 450, bakersfield, ca 93309
661.836.4300 fax 661.836.4311

San Jose
150 south first st., suite 200
san jose, california 95113
408.924.0841
fax 408.924.0844

San Luis Obispo
4115 broad street, suite b-6
san luis obispo, ca 93401
805.546.0433
fax 805.546.0504

Oakland
350 frank ogawa plaza., suite 300
oakland, california 94612
510.891.0670
fax 510.891.0674

Principal Architects
david r. cartinal, f.a.i.a., C-6564
frank a. ghezzi, a.i.a., C-3132
mark engelsen, a.i.a., C-8021
william r. tuculet, a.i.a., C-8702
dean a. tatsuno, a.i.a., C-9190
bruce m. biggar, a.i.a., C-23134
brad henderson, a.i.a., C-10901
richard l. mello, a.i.a., C-18079


REGISTERED PROFESSIONAL ENGINEER JOHN Q. FORESTELLE NO. 2528 Exp. 3-31-04 STRUCTURAL STATE OF CALIFORNIA

8-25-03


JOHN Q. FORESTELLE
STRUCTURAL ENGINEER, INC.
1414 VALHALLA DRIVE
BAKERSFIELD, CALIFORNIA 93309
(661) 833-4311 FAX (661) 833-4314


FILE NO: 15-6

IDENTIFICATION STAMP
DIV. OF THE STATE ARCHITECT
APPL NO. 03-106664
AC ___ FLS ___ SS 12
DATE 8-26-03

# MODERNIZATION

FOR

COLONEL HOWARD NICHOLS SCHOOL
3401 RENEGADE AVE.
BAKERSFIELD, CA. 93306

BAKERSFIELD CITY SCHOOL DISTRICT

GENERAL NOTES AND TYPICAL DETAILS

Version Date: Version time:

| | |
|---|---|
| job no. | 02-127 |
| date | 8-26-03 |
| drawn by | J.Q.F. |
| chk'd by | J.Q.F. |
| ©copyright | 2002 |

S 1.01

JQF # 203-029