HEATING AND VENTILATING UNIT SCHEDULE

MARK	MANUFACTURER AND MODEL NO.	BLOWER SECTION: NO. OF FANS	FAN SIZE	R.P.M.	CFM	S.P.	FAN MOTOR DATA: H.P.	R.P.M.	CURRENT	HEATING COIL SECTION: FACE AREA	FACE VEL.	ENT. AIR TEMP.	LVG. AIR TEMP.	G.P.M.	Δt WATER	BTUH	CONTR. VALVE: SIZE	Δp	FILTER SECTION: TYPE	NO. AND SIZE	REMARKS
HV 1	AMERICAN AIR. FILTER NO. 2085 SPECIAL	1	15#		3600	1½#	3	1750	208V-3ϕ	8.75	435	67.2	117.2	27.4	15	206,000	1¼#	4#	FARR 44	4-16"x20"x2	COIL SPLIT BY FACE W/ TWO EQUAL SECTIONS - FLOW THRU UNIT - 2 ROW COIL - PROVIDE VIBRATION ISOLATION BASE - SEE 7/M6
HV 2	AMERICAN AIR. FILTER NO. 2125 SPECIAL	2	12¼#	1070	6000	1½#	3	1750	208V-3ϕ	12.5	478	55.6	105.6	45.2	15	373,000	1½#	4#	FARR 44	6-20"x20"x2	DRAW-THRU UNIT - 2 ROW COIL - SEE DETAIL 4/M7 PROVIDE VIBRATION - ISOLATION BASE
HV 3	AMERICAN BLOWER NO. 1415	1	15#	700	3800	1	1½#	1750	208V-3ϕ	7.8	450	65.0	94.2	14.7	15	110,000	1#	4#	FARR 44	6-16"x20"x2	DRAW-THRU UNIT - 2 ROW COIL - OP. WT. = 1650# PROVIDE VIBRATION - ISOLATION BASE

ROTARY COOLER WITH HEATING COIL SCHEDULE

MARK	MANUFACTURER AND MODEL NO.	BLOWER SECTION: NO. OF FANS	FAN SIZE	R.P.M.	CFM	S.P.	FAN MOTOR DATA: H.P.	R.P.M.	CURRENT	HEATING COIL SECTION: FACE AREA	FACE VEL.	ENT. AIR TEMP.	LVG. AIR TEMP.	G.P.M.	Δt WATER	BTUH	CONTROL VALVE: SIZE	Δp	FILTER SECTION: TYPE	NO. AND SIZE	REMARKS
RC 1	FARR #6000	1	19#		6000	0.6	2	1750	208V-3ϕ	12.9	500	25	68.2	51.2	15	278,000	1½#	4#	FARR 44	6-16"x20"x2	2 ROW COIL - OP. WT. = 1300#

EXHAUST FAN SCHEDULE

MARK	MANUFACTURER AND MODEL NO.	CFM	S.P.	R.P.M.	TIP SPEED	H.P.	CURRENT	REMARKS
EF 1	EXIT-AIRE #C-815	275	3/8#	1570	3550	1/25	115V-1ϕ	
EF 2	EXIT-AIRE #LX 2706	6000 7500	1/8# 1/4#	640 870	4020 2510	1	230V-3ϕ	TWO-SPEED SINGLE-WINDING 100% 50% OF CAPACITY
EF 3	EXIT-AIRE #C1808	1750	3/8#	780	3740	1/3	115V-1ϕ	
EF 4	PENN-RANGE-XI #24	4250	3/8#	975		1/2	230V-3ϕ	
EF 5	EXIT-AIRE #C-1508-B	755	3/8#	870	3750	1/6	115V-1ϕ	
EF 6	EXIT-AIRE #C1010	275	1/4#	1050	2810	1/20	115V-1ϕ	

REGISTER SCHEDULE

MARK	MANUFACTURER AND MODEL NUMBER	REMARKS
SW-1	AIR FACTORS AFV-OBD-1-40	
SW-2	AIR FACTORS AFV-OBD-1-40	PROVIDE "90" OPERATOR
CD-1	AIR FACTORS 2 RCGD-OBD-1-40	CORNER SUPPLY
CD-2	AIR FACTORS 4 RCGD-OBD-1-40	
CD-3	AIR FACTORS 2 RCGD-OBD-1-40	CORNER SUPPLY
CD-4	AIR FACTORS 2 RCGD-OBD-1-40	
CD-5	AIR FACTORS WO-MJ-4 RCGD-OBD-1-40	
RR-1	AIR FACTORS RAH-OBD-1-40	
RR-2	AIR FACTORS WO-MJ-OBD-1-40	

BOILER SCHEDULE

MARK	MANUFACTURER AND MODEL NO.	BTUH INPUT	BTUH OUTPUT	GROSS E.D.R.	WATER CAP.	G.P.M. CAP.	UNIT WEIGHT	GAS CONN.	FLUE SIZE
B 1	PEERLESS #1170-B	1,170,000	958,000			130		1¼#	14"#

PUMP SCHEDULE

MARK	MANUFACTURER AND MODEL NO.	SERVICE	LOCATION	CAP. G.P.M.	DISCH. FT. H2O	IMPELLER SIZE	WT.	MOTOR DATA: H.P.	R.P.M.	CURRENT	ENCLOSURE
P 1	AURORA #1½"x2"x9D TYPE CD	HEATING HOT WATER	BOILER RM.	130	60	8¼		3	1750	208V-3ϕ	DRIP PROOF

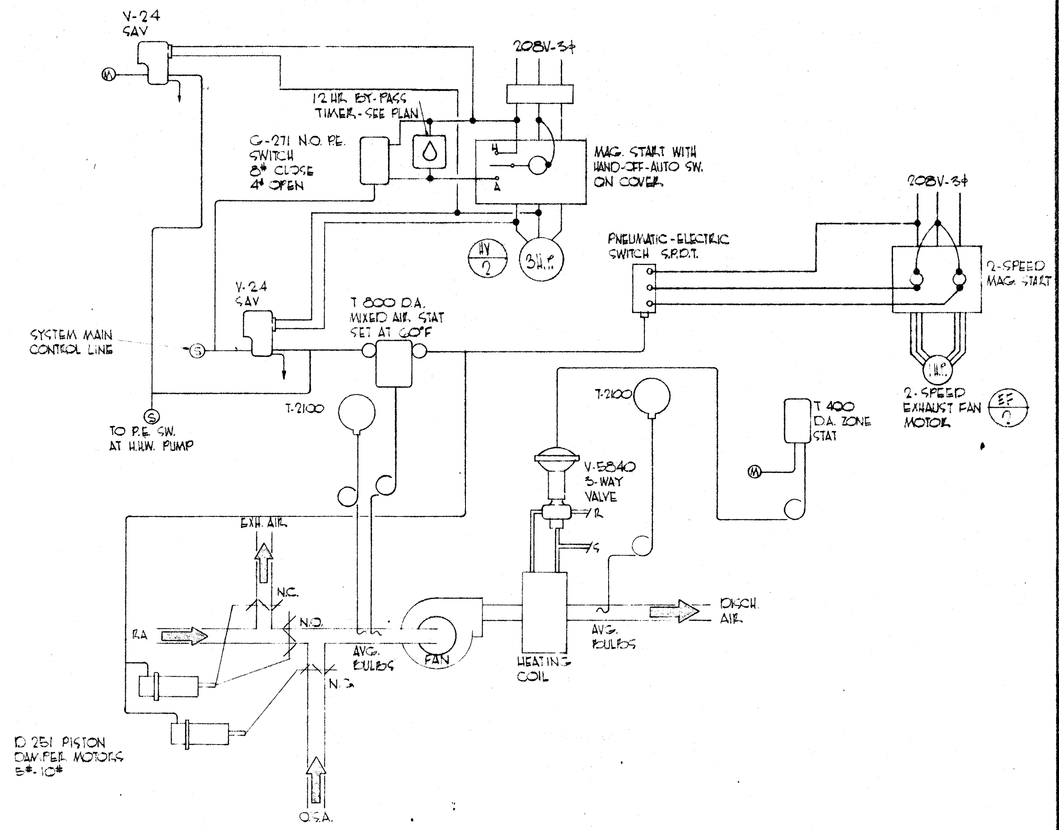

MULTI-PURPOSE CONTROL DIAGRAM

NO SCALE

1

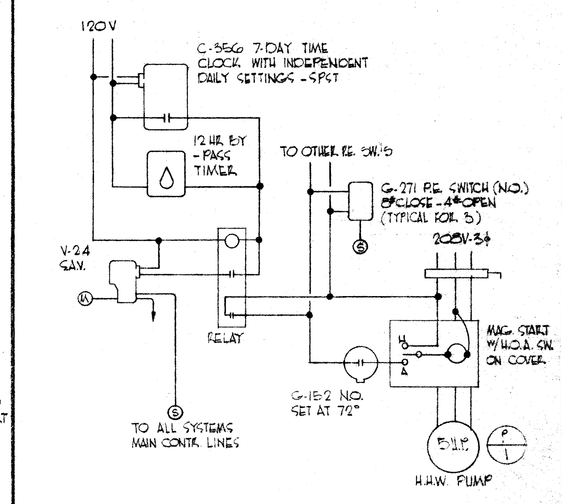

HEATING-HOT WATER PUMP CONTROL

NO SCALE

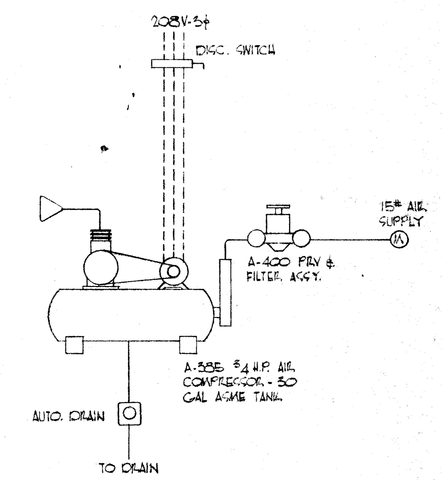

AIR COMPRESSOR CONTROL

NO SCALE

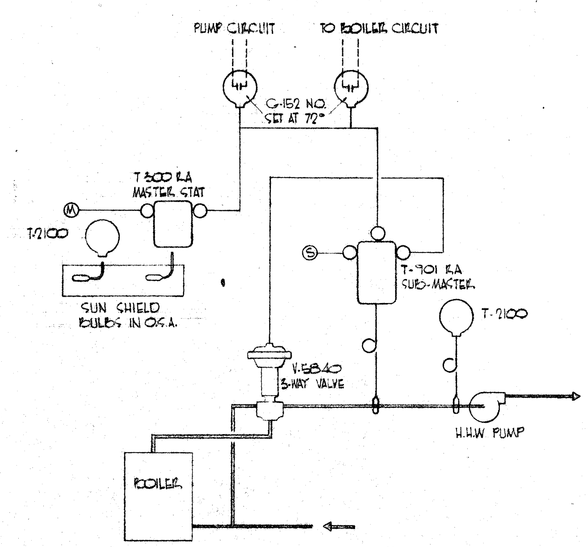

BOILER CONTROL

NO SCALE

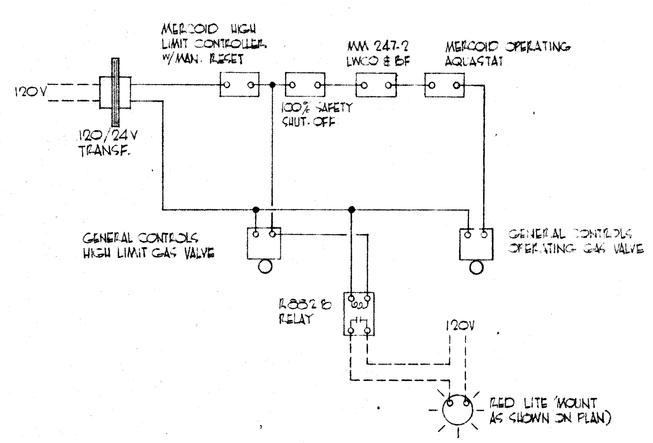

BOILER WIRING CONTROL DIAGRAM

NO SCALE

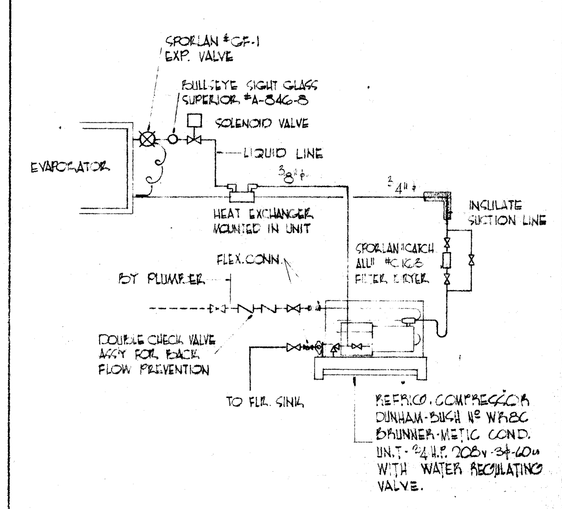

COLD-BOX PIPING DIAG.

NO SCALE

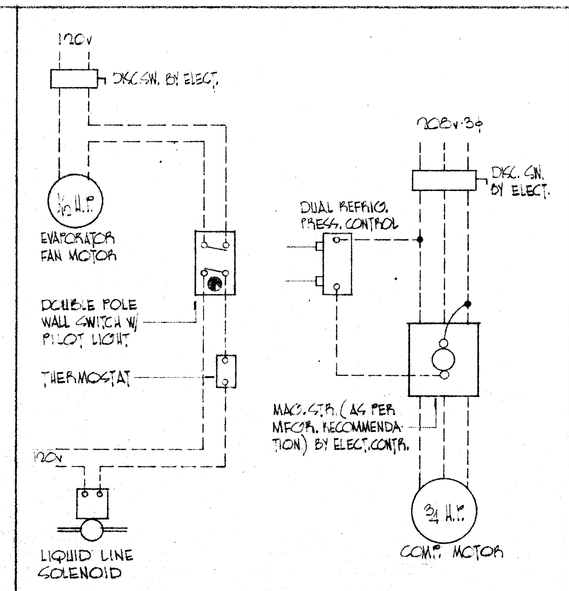

COLD-BOX WIRING DIAGRAM

NO SCALE

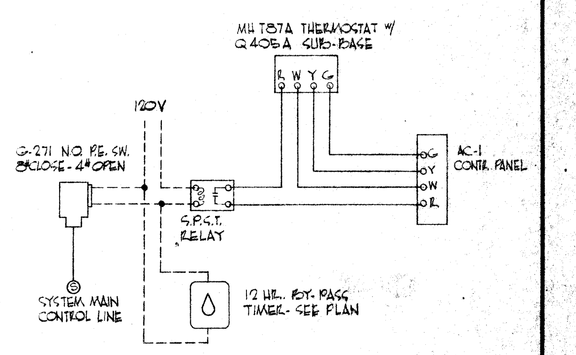

AC-1 CONTROL DIAGRAM

NO SCALE

CHECK AND VERIFY ALL DIMENSIONS AND CONDITIONS AT JOB SITE BEFORE PROCEEDING WITH THE WORK. REPORT ANY DISCREPANCIES TO THE ARCHITECT. DRAWN NICK MOLNOOK. CHECKED E.H. WILKERSON

REVISIONS		
SYMB.	BY	DATE
	AS BUILT	
	ADDENDUM	
	CHANGE ORDER	
	CLARIFICATION	

STATE OF CALIFORNIA
STATE FIRE MARSHAL
APPROVED UNDER STATUES OF CALIFORNIA
BY: [illegible]

STATE OF CALIFORNIA - DEPARTMENT OF GENERAL SERVICES - OFFICE OF ARCHITECTURE AND CONSTRUCTION
25099 APPROVED OCT 3 1964
[illegible]

APPROVED BY DIVISION OF STATE ARCHITECT BAKERSFIELD CITY SCHOOL DISTRICT
OCT 13 1964
[illegible]

APPROVED – DATE

E.H. WILKERSON AND ASSOC.
12 NILES ST. PHONE 324-0036
BAKERSFIELD CALIFORNIA
E.H. Wilkerson No. 2209
MECHANICAL ENGINEER

C-335
ERNEST L. McCOY A.I.A. ARCHITECT
2811 H. STREET
BAKERSFIELD
PHONE 324-9851
CALIFORNIA 93303

HENRY EISSLER ELEMENTARY SCHOOL
BAKERSFIELD CITY SCHOOL DISTRICT
BAKERSFIELD, CALIFORNIA.

JOB No. 63-17
SHEET M 5 OF 5 SHEETS

DIETERICH-POST CLEARPRINT 1000H