APPLICABLE CODES

- 2001 CALIFORNIA BUILDING STANDARDS ADMINISTRATIVE CODE
- 2001 CALIFORNIA BUILDING CODE, VOLUMES 1, 2 AND 3
- 2001 CALIFORNIA ELECTRICAL CODE
- 2001 CALIFORNIA MECHANICAL
- 2001 CALIFORNIA PLUMBING CODE
- 2001 CALIFORNIA ENERGY CODE
- 2001 CALIFORNIA ELEVATOR SAFETY CONSTRUCTION CODE
- 2001 CALIFORNIA FIRE CODE
- 2001 CALIFORNIA REFERENCED STANDARDS CODE
- TITLE 19 PUBLIC SAFETY – CALIFORNIA STATE FIRE MARSHAL REQUIREMENTS
- NFPA 13, 1999 EDITION, THE INSTALLATION OF AUTOMATIC SPRINKLER SYSTEMS, AS AMENDED
- NFPA 14, 2000 EDITION, INSTALLATION OF STANDPIPE, PRIVATE HYDRANT AND HOSE SYSTEMS
- NFPA 24, 1995 EDITION, INSTALLATION OF PRIVATE FIRE SERVICE MAINS AND THEIR APPURTENANCES
- NFPA 72, 1999 EDITION, NATIONAL FIRE ALARM CODE, AS AMENDED
- GREEN OAKS FAMILY ACADEMY ELEMENTARY SCHOOL FIRE PROTECTION ACT (aka SB575)

FIRE ALARM SYSTEM DESCRIPTION

1. FIRE ALARM SYSTEM AND DEVICES ARE "ANALOG ADDRESSABLE" TYPE.
2. FIRE ALARM SYSTEM INITIATION METHOD IS "AUTOMATIC" TYPE.
3. LOCAL FIRE AUTHORITY SHALL RECEIVE A COPY OF APPROVED PLANS FOR COURTESY REVIEW.
4. FIRE ALARM SYSTEM SIGNALING CIRCUITS ARE "CLASS B" TYPE.
5. SUPERVISING STATION MONITORED AS REQUIRED BY NFPA 72, AMENDED BY ARTICLE 91.

FIRE ALARM CABLE SCHEDULE:

SIGNALING CIRCUITS	#12 STRANDED THHN/THWN	RED & BLACK
DETECTION UNDERGROUND	#14 STRANDED THHN/THWN	BROWN & YELLOW
HEAT DETECTION, ABOVE GRADE (POWER LIMITED SYSTEM ONLY)	WEST PENN #970	WHITE (NO SUBSTITUTION)

FIRE DETECTION SYSTEM NOTES:

1. ALL WIRING IS SHOWN DIAGRAMMATICALLY. CONTRACTOR MAY VARY SEQUENCE OR CIRCUITRY: HOWEVER, ALL CIRCUITS SHALL BE CONTINUOUS AND SUPERVISED FROM DEVICE TO DEVICE OR FAT TO DEVICE OR FOP TO FAT OR FAT TO FAT. NO PARALLEL BRANCHING SHALL BE ALLOWED. ANY CONNECTION OF ANY BREAK IN ANY CONDUCTOR SHALL BE BY TERMINAL CONNECTION AT A DEVICE OR AT A FAT ONLY.
2. ALL CONNECTIONS SHALL BE PROPERLY LABELED BY CONDUCTOR AND SHALL HAVE STAKE ON LUG CONNECTORS. PANDUIT TAG (TIE WRAP) SEPARATE.
3. FIRE ALARM TERMINAL CABINETS SHALL HAVE SUFFICIENT SPACE, TERMINAL BOARDS AND SCREW TERMINAL CONNECTORS TO ALLOW CONNECTION OF ALL CONDUCTORS SHOWN. CONTRACTOR SHALL BE REQUIRED TO SUBMIT WITH HIS OTHER SHOP DRAWINGS, DETAILED DRAWINGS OF HIS PROPOSED CONNECTIONS AT EACH FIRE ALARM TERMINAL CABINET PRIOR TO COMMENCING ANY WORK.
4. ALL CONDUCTORS SHOWN SHALL BE #12 & #14 AWG, STRANDED (19 STRANDS OR LESS) COPPER, UNLESS OTHERWISE NOTED. (THHN/THWN – BELOW GRADE).
5. WRITTEN CERTIFICATION USING NFPA 72 INSPECTION AND TESTING FORM BY THE FIRE ALARM EQUIPMENT DISTRIBUTOR (OR VENDOR OR MANUFACTURER) SHALL BE SUBMITTED TO THE ARCHITECT (WITH COPIES TO THE ELECTRICAL ENGINEER AND THE STATE ARCHITECT) AND THE INSTALLATION INCLUDES TESTING AND OPERATION CONFORMS IN ALL RESPECTS TO THE REQUIREMENTS AS SET FORTH IN TITLE 19 OF THE CALIFORNIA CODE OF REGULATIONS AND PART 3, ARTICLE 3–760 OF TITLE 24 OF THE C.C.R. AND C.B.C. SECTION 305.9 . THE CONTRACTOR SHALL COMPLETE A FIRE ALARM SYSTEM CERTIFICATION AND DESCRIPTION FORM AND SUBMIT TO DIVISION OF STATE ARCHITECT.
6. UPON COMPLETION OF THE INSTALLATION OF THE FIRE ALARM SYSTEM, A SATISFACTORY TEST OF THE ENTIRE SYSTEM SHALL BE MADE IN THE PRESENCE OF THE ENFORCING AGENCY AND INSPECTOR OF RECORD.
7. NEW FIRE ALARM AUDIBLES SHALL BE THE SAME BASIC SOUND & PATTERN AS EXISTING. PROVIDE TEMPORAL CODE 3. ALL AUDIBLES AND VISUALS SHALL BE SYNCHRONIZED.
8. ALL UNDERGROUND CONDUITS AND EXTERIOR CONDUCTORS SHALL HAVE WATER TIGHT FITTING.
9. SMOKE DETECTORS SHALL BE MOUNTED MINIMUM 36" FROM SUPPLY AND RETURN AIR VENTS PER MANUFACTURER'S RECOMMENDATIONS.
10. INSTALLATION OF F.A. EQUIPMENT SHALL BE BY AN AUTHORIZED ENGINEERED SYSTEM DISTRIBUTOR FOR THE EQUIPMENT SPECIFIED BY THE MANUFACTURER FOR SALES, SERVICE, INSTALLATION AND MAINTENANCE. PROVIDE CERTIFICATIONS WITH EQUIPMENT SUBMITTALS. SUBMITTALS BY FIRMS NOT FULFILLING THIS REQUIREMENT WILL BE AUTOMATICALLY REJECTED.
11. THE CERTIFIED INSTALLER WILL BE REQUIRED TO PROVIDE ALL FACTORY WARRANTIES AT THE CLOSE UP OF THE PROJECT.
12. INSTALLER SHALL BE NICET LEVEL 2 CERTIFIED.
13. THE CONTRACTOR SHALL ARRANGE A MEETING WITH F.A. INSTALLER PRIOR TO ROUGH-IN TO COORDINATE THE INSTALLATION.
14. PROVIDE ACCESS PANEL FOR ALL ATTIC HEAT DETECTORS LOCATED IN NON-ACCESSABLE CRAWL OR ATTIC SPACES.
15. CONTRACTOR SHALL PROVIDE SOUND LEVEL METER FOR VERIFYING THAT 15d BA ABOVE AMBIENT NOISE AND MINIMUM 75d BA AT 10 FEET IS PROVIDED BY INSTALLED (E)AUDIBLE DEVICES. ADDITIONAL AUDIBLE NOTIFICATION DEVICES SHOULD BE ADDED AS NEEDED TO SATISFY THIS REQUIREMENT VIA CHANGE ORDER OR ADDENDUM WITH UPDATE FLOOR PLANS AND CALCULATIONS

NOTE:

1. PROVIDE #12 COPPER GROUNDING CONDUCTOR TO GROUND ROD, METAL WATER PIPE OR SEPARATE CONDUCTOR IN 120V FEED FOR ALL NEW FACP.

SCOPE OF WORK

THIS PROJECT IS A MODERNIZATION OF A EXISTING SCHOOL CAMPUS. THE FIRE ALARM PORTION OF THIS PROJECT SHALL INCLUDE ADDITION OF AUTOMATIC DETECTION DEVICES TO A EXISTING FIRE ALARM SYSTEM, TO INCLUDE DETECTION/INITIATION DEVICES, AND NOTIFICATION APPLIANCES, AS INDICATED ON THESE PLANS. ALL REQUIRED MODULES, CARDS, RESISTORS, MISCELLANEOUS PARTS, ETC. SHALL BE PROVIDED, WHETHER SHOWN OR NOT, TO PROVIDE A COMPLETE SYSTEM.

SYMBOL SCHEDULE

SYMBOL	NAME	DESCRIPTION
	WIRING UNDER FLOOR OR IN WALL	3/4"C. MINIMUM U.O.N.
	WIRING IN CEILING	3/4"C. MINIMUM U.O.N.
	HOME RUN	TO RESPECTIVE PANEL OR TERM. CAB.
	SURFACE TWO PIECE RACEWAY	WIREMOLD # PAINT TO MATCH ADJACENT SURFACE
	(E)FIRE ALARM CONTROL PANEL	GRINNEL FIREQUEST 300
	END OF THE LINE RESISTOR	
	(E) EXTERIOR FA HORN	
F	(E)FIRE ALARM PULL STATION	FCI #MS-2 CSFM #7150-0694:107
H A	HEAT DETECTOR IN ATTIC CONVENTIONAL	CHEMETRONIC #502 CSFM #7300-1209:166
H	HEAT DETECTOR CEILING MOUNTED CONVENTIONAL	CHEMETRONIC #501 CSFM #7300-1209:166
S	SMOKE DETECTOR	SYSTEM SENSOR#1151 CSFM #7271-1209:157 SUPERVISORY 55 uA ALARM CURRENT 72mA W/BASE SYSTEM SENSOR#B401 CSFM #7300-1209:128 ALARM CURRENT 72mA
J	JUNCTION BOX – AS REQUIRED	4S BOX & FLUSH PLATE MINIMUM
J W	JUNCTION BOX – 'W' INDICATES WIREMOLD	
15	FIRE ALARM VISUAL. '#' INDICATES CANDELA. SYNCRONIZED	WHEELOCK #RSS-2415W-FR OPERATING CURRENT .051A CSFM # 7125-0785:141
30	FIRE ALARM VISUAL. '#' INDICATES CANDELA. SYNCRONIZED	WHEELOCK #RSS-2430W-FR OPERATING CURRENT .081A CSFM # 7125-0785:141
75	FIRE ALARM VISUAL. '#' INDICATES CANDELA. SYNCRONIZED	WHEELOCK #RSS-2475W-FR OPERATING CURRENT .133A CSFM # 7125-0785:141
30	FIRE ALARM HORN/STROBE # INDICATES CANDELA, SYNCHRONIZED	WHEELOCK #AS-2430W-FR CSFM #7125-0785:131
110	FIRE ALARM HORN/STROBE # INDICATES CANDELA, SYNCHRONIZED	WHEELOCK #AS-24110W-FR CSFM #7125-0785:131
	FIRE ALARM EXTERIOR HORN	WHEELOCK #MT-12/24-R CSFM #7135-0785:118
C	FIRE ALARM MINI HORN SYNCHRONIZED C = CEILING MOUNTED	WHEELOCK #MIZ-~~TC~~-24-R CSFM #7135-0785:115
S	FA VISUAL SYNCHRONIZATION MODULE .025 OPERATING AMPS	WHEELOCK #SM-12/24 CSFM #7300-0785:132
C	FA COMMUNICATOR	SILENT KNIGHT # 5104 CSFM# 7165-0659:114

FIRE ALARM DEVICE SEQUENCE OF OPERATION MATRIX

INITIATION → / RESPONSE ↓	AREA SMOKE OR HEAT DETECTORS	POWER FAILURE	TROUBLE	FIRE SPRINKLER FLOW SWITCH	FIRE SPRINKLER TAMPER SWITCH
ANNUNCIATE AT ADMINISTRATIVE OFFICE	•	•	•	•	•
ACTIVATE AUDIO/VISUAL THRU-OUT CAMPUS	•			•	
ANNUNCIATE AT SUPERVISING STATION	•			•	

Item (9) #1 — Refer to Electrical Drawings, Sheet E1.12 – Symbol Schedule:

CLARIFY Contractor shall **PROVIDE** fire alarm devices that are currently manufactured and CSFM listed compatible with the existing Thorn control panel.

FULLY AUTOMATIC SYSTEM

FIRE ALARM COMPLETE PLAN SUBMITTAL

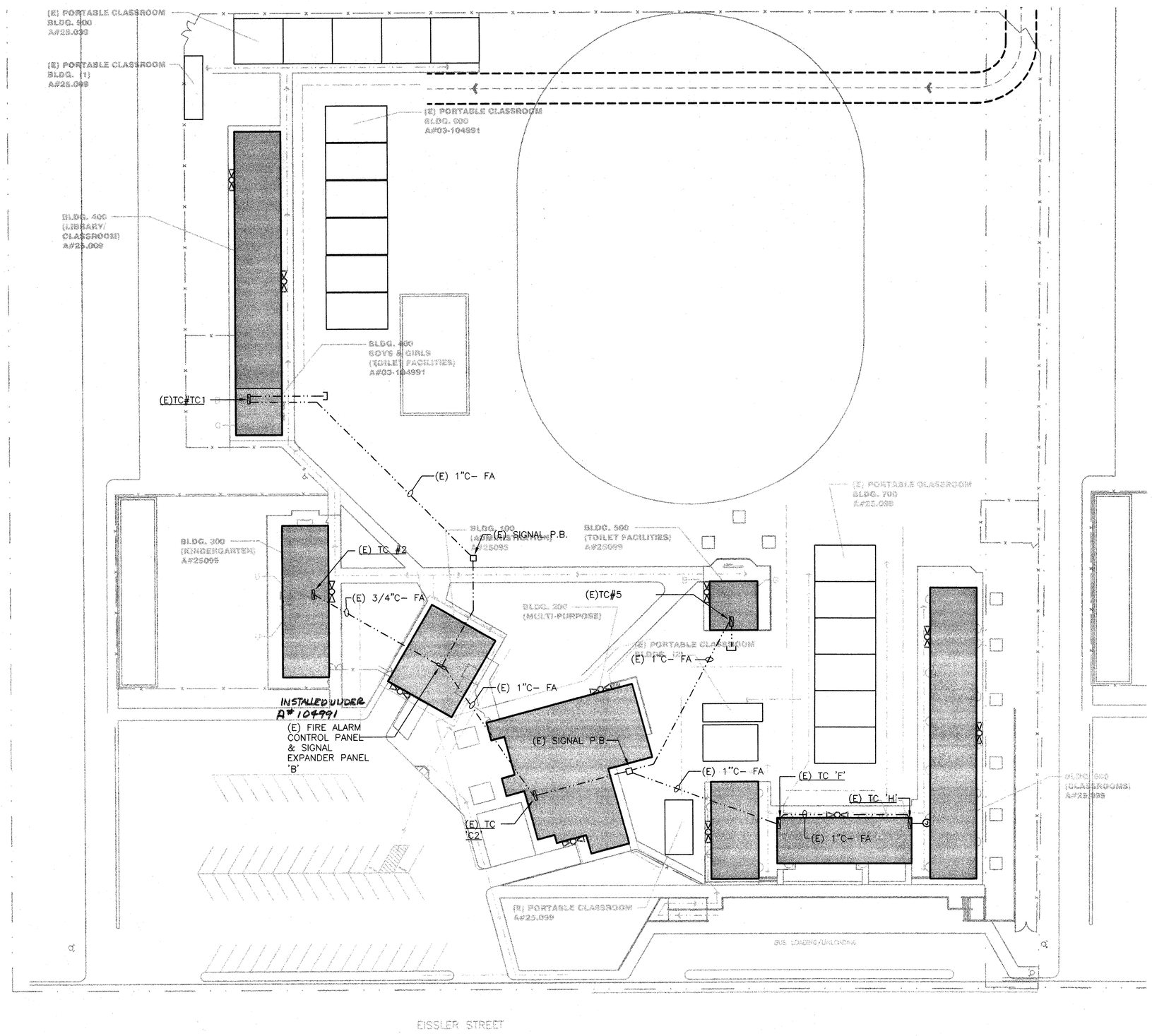

FIRE ALARM SITE PLAN

1"=40'-0"

N

D:\Drawings\BFGC\02-135\02135-E1.12.dwg, E1.12, 6/19/2003 1:27:04 PM, Aleksenko, 1:1, Copyright 2003 Interstate Engineering, Inc. (Plotted by Tatyana)

bfgc Architecture

Bakersfield
5500 ming avenue, suite 450, bakersfield, ca 93309
661.836.4300 fax 661.836.4311

San Jose
150 south first st., suite 200
san jose, california 95113
408.924.0841
fax 408.924.0844

San Luis Obispo
4115 broad street, suite b-6
san luis obispo, ca 93401
805.546.0433
fax 805.546.0504

Oakland
350 frank ogawa plaza, suite 300
oakland, california 94612
510.891.0670
fax 510.891.0674

Principal Architects
david r. cartnal, f.a.i.a., C-6564
frank a. ghezzi, a.i.a., C-3132
mark engelien, a.i.a., C-8021
william r. tuculet, a.i.a., C-8702
dean a. tatsuno, a.i.a., C- 9190
bruce m. bigger, a.i.a., C-23134
brad henderson, a.i.a., C-10901
richard l. mello, a.i.a., C-18079

LICENSED ARCHITECT STATE OF CALIFORNIA

REGISTERED PROFESSIONAL ENGINEER JAMES W. GRAHAM No. 5101 09/30/06 Electrical Engineer STATE OF CALIFORNIA

INTERSTATE ENGINEERING ESTABLISHED 1968
466 W. Fallbrook Ave., Suite 106
Fresno, California 93711
(559) 432-4490 P (559) 432-4494 fax
James W. Graham. Electrical Engineer
E.E. #5101

rev. no: rev. date: revision:

AGENCY TRACKING No:

FILE No: 15-6

IDENTIFICATION STAMP DIV. OF THE STATE ARCHITECT
APPL NO: 03-106663
AC FLS SS R2
DATE 06-24-03

MODERNIZATION

FOR

HENRY EISSLER SCHOOL
2901 EISSLER STREET
BAKERSFIELD, CA 93306

BAKERSFIELD CITY SCHOOL DISTRICT

FIRE ALARM SITE PLAN SYMBOL SCHEDULE, NOTES

KEY PLAN

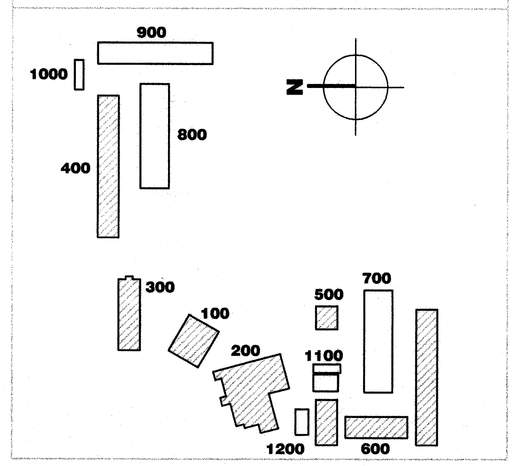

Version Date:	Version time:
job no.	02-126
date	06/24/03
drawn by	T.V.A.
chk'd by	D.P.G.
©copyright	2003

E 1.12