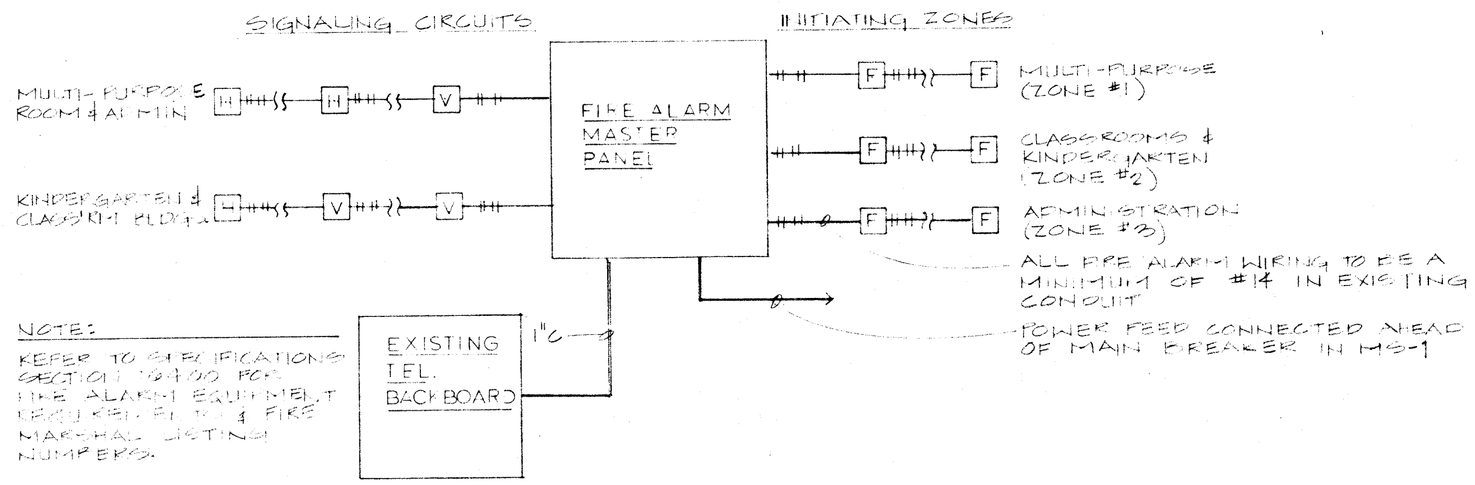

FIRE ALARM WIRING DIAGRAM

E7

NO SCALE

FIXTURE SCHEDULE

FIXTURE SYMBOL (3-A-150): 3=CIRCUIT NUMBER, A=FIXTURE TYPE, 150=FIXT. WATTAGE
ALL FLUORESCENT LAMPS TO BE "WATT-MISERS" OR EQUAL (U.O.N.)
ALL FLUORESCENT BALLASTS TO BE MARK III ENERGY SAVERS (U.O.N.)

TYPE	WATTS	LAMPS	VOLT.	MANUFACTURER	CATALOG Nº	MOUNT	NOTES
① A	72	2-F40 T12 RS	120	METALUX	2G-240A	FLUSH T-BAR	
B	115	3-F40 T12 RS		METALUX	2G-340A	↓	
C	72	2-F40 T12 RS		METALUX	WA-240A	SURF.	
D	72	2-F40 T12 RS		LIGHTRON	VPFI-240	↓	LEXAN LENS VANDAL PROOF
E	—	—		HALO	L623 (4CKT LT. TRACK)	SURF	LENGTHS SHOWN ON PLAN. PROVIDE ALL NECESSARY CONNECTORS
F	150	150W R40		HALO	L707 & L201	TRACK	PROVIDE 16 COLOR FILTERS, AS SELECTED BY OWNER
A1	72	2-F40 T12 RS		METALUX	2G240A	FLUSH T-BAR	
X	60	MAXIMIZER RSC		LITHONIA	HOME-WIRE	SURF.	BK. EXIT W/2 HALOGEN LAMPHEADS
XE	30	MAXIMIZER RSC	↓	LITHONIA	ELM12X	SURF. ABOVE DOOR	EMERG. UNIT W/ TWO HALOGEN LAMHEADS AIMED LOCATION

① USE STANDARD (NON ENERGY SAVERS) LAMPS & STANDARD BALLAST FOR THESE FIXTURES (VIA HONEYWELL DIMMING)

CODE, RULES AND REGULATIONS

ALL WORK AND MATERIALS SHALL COMPLY WITH THE LATEST REGULATIONS OF THE STATE FIRE MARSHAL, CALIFORNIA ADMINISTRATIVE CODE, SERVING UTILITY COMPANIES AND OTHER APPLICABLE STATE AND LOCAL ORDINANCES. NOTHING IN THESE PLANS OR SPECIFICATIONS IS TO BE CONSTRUED TO PERMIT WORK NOT CONFORMING TO THESE CODES. WHERE WORK OF A HIGHER DEGREE IS INDICATED IN THE PLANS OR SPECIFICATIONS THIS REQUIREMENT SHALL GOVERN.

ELECTRICAL SYMBOLS

ALL DIMENSIONS TO CENTER OF BOX, U.O.N.

	QUADRUPLEX RECEPTACLE +12" U.O.N.
	CLOCK OUTLET
(E)	DENOTE EXISTING
	18"X18"X4" CABINET
	CONDUIT RUN IN WALL / ATTIC(½"C-2#12 AWG TW+1#12 GND)
	" " IN FLOOR OR U.G.(")
	ANY CONDUIT RUN ½"C-3#12 AWG TW+1#12 GND
	" " " ¾"C-4#12 " " " "
	" " " ¾"C-5#12 " " " "
	" " " 1"C-6#12 " " " "
	TERMINAL CABINET SIZE AS SHOWN
	DISTRIBUTION PANEL
	TELEPHONE OUTLET IN WALL (+12" U.O.N.)
	INTERCOM ADMIN. CONTROL STATION
	DUPLEX RECEPTACLE IN WALL (+12" U.O.N.)
	" " IN FLOOR
	SPECIAL OUTL. AS NOTED ON DWGS (+12" U.O.N.)
	JUNCTION BOX W/FLEX CONNECTION
	CEILING MOUNTED FIXTURE
	WALL " " MT. AS SHOWN
	RECESSED " " IN CEILING
	FLUORESCENT " MT. AS SHOWN
	EXTERIOR EMERGENCY LIGHTING FIXTURE
	EXIT " WITH EMERGENCY LIGHTING HEADS
	MOTOR
	EXHAUST FAN
$	SWITCH (+4'-0" U.O.N.)
$3	" THREE WAY (")
T	THERMOSTAT (")
TS	TIME SWITCH FLUSH MT'D (U.O.N.)
	PHOTO CONTROL ON ROOF
U.O.N.	UNLESS OTHERWISE NOTED
	FUSED DISCONNECT SWITCH BY ELEC. CONTR.(U.O.N.)
S	FLUSH CEILING SPEAKER
	INTERCOM HANDSET FLUSH ON WALL +48"
S	MOTION SENSOR SWITCHPACK
	MOTION SENSOR
	FIRE ALARM VISUAL +7'-6" U.O.N.
H	FIRE ALARM HORN +7'-6" U.O.N.
F	FIRE ALARM MANUAL PULL STATION +48" U.O.N.
HD	HAND DRYER +48" U.O.N.
M	MICROPHONE OUTLET-BOX ONLY
	STAGE SPEAKER - BOX ONLY
P	PROJECTOR INPUT - BOX ONLY
	ELECTRICAL KEYNOTE-REFER TO KEYNOTES ON EACH SHEET
$x	KEY OPERATED SWITCH
S	HVAC DUCT SMOKE DETECTOR -120V
R	120:240 CONTROL RELAY XFMR AT HVAC UNIT

FIRE ALARM SYSTEM BATTERY CAPACITY CALCULATION:

	STANDBY (AMPS)	ALARM (AMPS)
FIRE ALARM CONTROL PANEL	0.23	0.550
HORNS 18 @ 0.063		1.13
VISUAL UNITS 16 @ 0.080		1.280
TOTAL	0.23	2.96

BATTERY TIME REQUIRED X 24.0 HRS X 0.0833 HRS (5 MIN) =

AMP-HOURS 5.52 AH + 0.25

TOTAL BATTERY CAPACITY REQUIRED = 5.77 AH

BATTERY CAPACITY SPECIFIED = 8.0 AH

FIRE ALARM LEVEL OF AUDIBILITY

ALARM INDICATING DEVICES OF A FIRE ALARM SYSTEM INTENDED TO ALERT ALL OCCUPANTS SHALL BE SO LOCATED AND UNOBSTRUCTED AS TO CAUSE A LEVEL OF AUDIBILITY OF NOT LESS THAN 10 DB ABOVE AMBIENT NOISE LEVELS MEASURED FOUR FEET ABOVE THE FLOOR.

AMBIENT NOISE LEVELS SHALL BE CONSTRUED TO MEAN THAT WHICH CAN NORMALLY BE EXPECTED TO EXIST WHEN THE FACILITY, BUILDING, ROOM OR AREA IS FUNCTIONING UNDER NORMAL OPERATIVE OR WORKING CONDITIONS, SEC. 2-7203, TITLE 24.

THE FIRE ALARM SYSTEM SHALL CONFORM TO SECTION 2-809 PART 2 OF TITLE 24 AND ARTICLE 3-760 OF PART 3, TITLE 24 OF THE CALIFORNIA ADMINISTRATIVE CODE.

INSTALLATION OF THE FIRE ALARM SYSTEM SHALL NOT BE STARTED UNTIL DETAILED PLANS, SPECIFICATIONS AND ENGINEERING CALCULATIONS HAVE BEEN ACCEPTED AND SIGNED BY THE ARCHITECT OR STRUCTURAL ENGINEER IN GENERAL CHARGE OF DESIGN AND THE SIGNATURE OF THE ARCHITECT OR PROFESSIONAL ENGINEER WHO HAS BEEN DELEGATED RESPONSIBILITY COVERING THE WORK SHOWN ON A PARTICULAR PLAN OR SPECIFICATION, AND APPROVED BY THE OFFICE OF THE STATE ARCHITECT, AND THE STATE FIRE MARSHAL.

UPON COMPLETION OF THE INSTALLATION OF THE FIRE PROTECTIVE SIGNALING EQUIPMENT, A SATISFACTORY TEST OF THE ENTIRE SYSTEM SHALL BE MADE IN THE PRESENCE OF THE ENFORCING FIRE AGENCY. SECTION E740-16, TITLE 24, C.A.C.

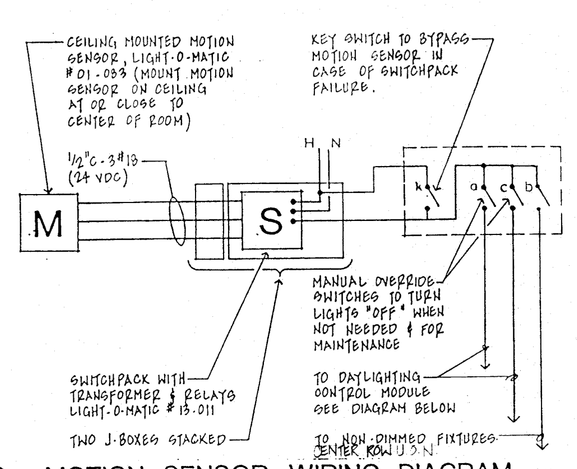

MOTION SENSOR WIRING DIAGRAM

3 / E7

NOTE: PULL SEPARATE NEUTRAL TO EACH DIMMING CIRCUIT

NO SCALE

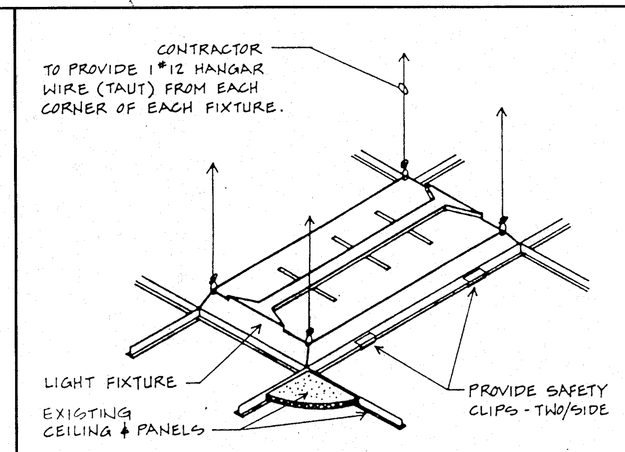

FIXTURE "A" MOUNTING

1 / E7

"B" SIMILAR

NO SCALE

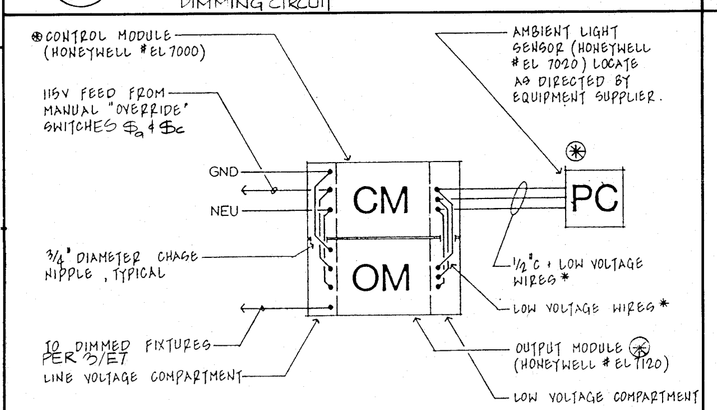

DAYLIGHTING CONTROL WIRING DIAGRAM

4 / E7

* VERIFY CONTROL WIRING REQUIREMENTS WITH EQUIPMENT SUPPLIER
(*) ONE REQUIRED FOR EACH GROUP OF DIMMED FIXTURES

NO SCALE

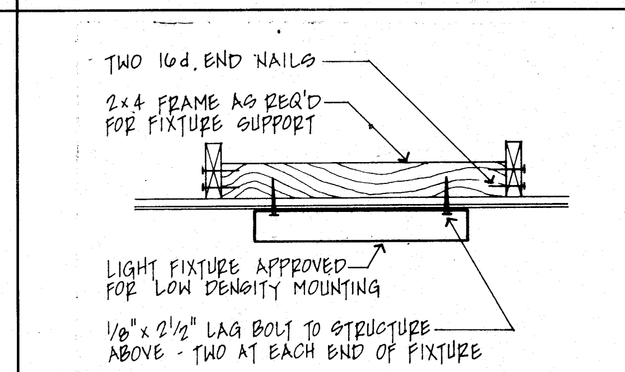

FIXTURE "C" MOUNTING

2 / E7

"B" SIMILAR

NO SCALE

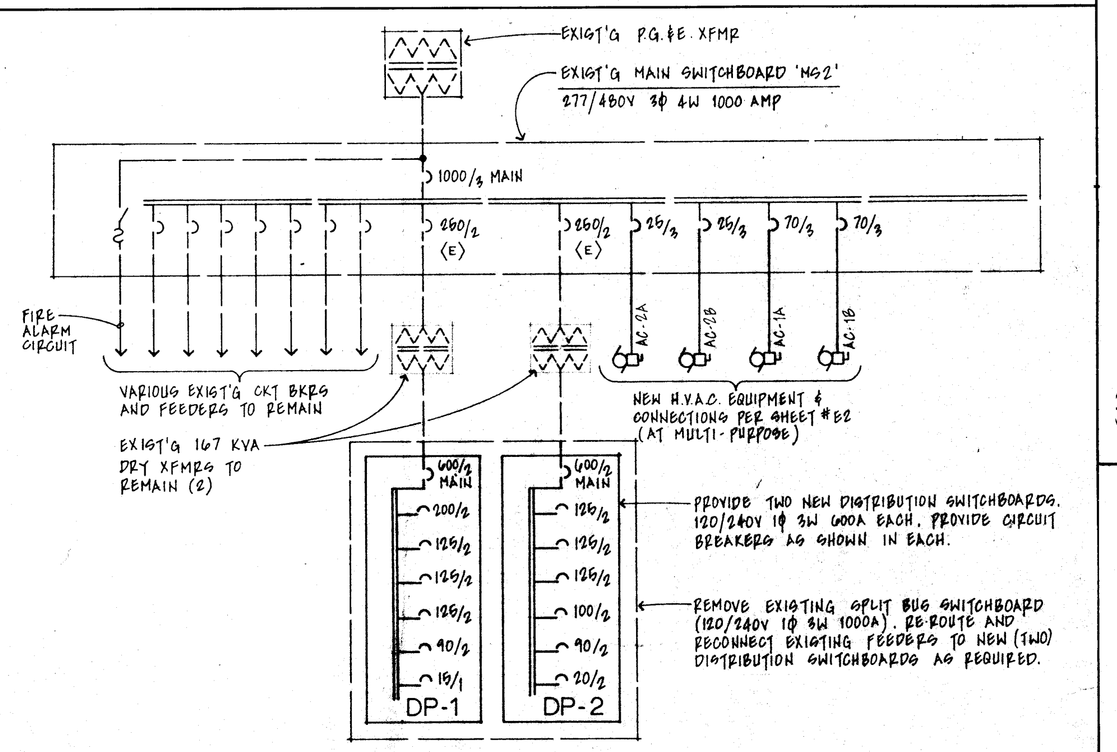

ONE LINE DIAGRAM

6 / E7

NO SCALE

SCHOOLS SEISMIC ANCHORAGE REQUIREMENTS

ALL MECHANICAL AND ELECTRICAL EQUIPMENT SHALL BE BRACED OR ANCHORED TO RESIST A HORIZONTAL FORCE ACTING IN ANY DIRECTION USING THE FOLLOWING CRITERIA:

FIXED EQUIPMENT ON GRADE	22% OF OPERATING WEIGHT
FIXED EQUIPMENT ON STRUCTURE	33% OF OPERATING WEIGHT
EMERGENCY POWER EQUIPMENT ON GRADE	33% OF OPERATING WEIGHT
EMERGENCY POWER EQUIPMENT ON STRUCTURE	50% OF OPERATING WEIGHT

NOTE: AT MULTI-PURPOSE BLDG. MULTIPLY THESE VALUES BY 1.25 PER TABLE 2-22-K)

FOR FLEXIBLY MOUNTED EQUIPMENT, USE 2 X THE ABOVE VALUES.
SIMULTANEOUS VERTICAL FORCE - USE 1/3 X HORIZONTAL FORCE.

WHERE ANCHORAGE DETAILS ARE NOT SHOWN ON THE DRAWINGS, THE FIELD INSTALLATION SHALL BE SUBJECT TO THE APPROVAL OF THE STRUCTURAL ENGINEER AND THE FIELD REPRESENTATIVE OF THE OFFICE OF THE STATE ARCHITECT.

APPROVED
Department of General Services
Office of the State Architect
MAY - 9 1989
Structural Safety Section
VRC/LA

CORNELIUS ENGINEERING, INC.
Consulting Electrical Engineer
918 W. Main St. - Ph. 733-2671
Visalia, California 93291
Gerald Cornelius Calif. no. 7198

THESE DRAWINGS, RELATED SPECIFICATIONS, IDEAS, DESIGNS, AND ARRANGEMENTS REPRESENTED THEREBY ARE AND SHALL REMAIN THE PROPERTY OF THE ARCHITECT AND SHALL NOT BE USED IN WHOLE OR IN PART BY OTHERS OR USED IN CONNECTION WITH ANY WORK OR PROJECT OTHER THAN THE SPECIFIC PROJECT FOR WHICH THEY HAVE BEEN PREPARED AND DEVELOPED WITHOUT THE WRITTEN CONSENT OF THE ARCHITECT. SUBMISSION OF THESE DRAWINGS OR SPECIFICATIONS SHALL CONSTITUTE CONCLUSIVE EVIDENCE OF ACCEPTANCE OF THESE RESTRICTIONS.

WRITTEN DIMENSIONS ON THESE DRAWINGS SHALL HAVE PRECEDENCE OVER SCALED DIMENSIONS; CONTRACTORS SHALL VERIFY AND BE RESPONSIBLE FOR ALL DIMENSIONS AND CONDITIONS. SHOP DRAWINGS MUST BE SUBMITTED TO THE OFFICE FOR REVIEW OF ANY VARIATIONS FROM THE DIMENSIONS AND CONDITIONS SHOWN BY THOSE DRAWINGS.

DETAILED SHOP DRAWINGS MUST BE SUBMITTED TO THIS OFFICE FOR REVIEW BEFORE PROCEEDING WITH THE FABRICATION OF ANY PRODUCT TO BE INCLUDED IN THIS PROJECT.

DATE	ISSUE FOR

DATE	REVISION

Bessie E. Owens Elementary School Modernization
Bakersfield City School District

APPROVED
FIRE AND LIFE SAFETY ONLY
MAR 2 1989
AFFECT FIRE AND LIFE SAFETY ONLY
SOUTHERN SECTION

C-8366
pechin associates architects
1400 easton drive
bakersfield, ca 93309
suite 138
(805) 322-2021

SHEET E7

Project Number: 413-0788
Revision Date: 1-16-89